INTENSITY®

Refresh your life

HIGH EFFICENCY - AIR HANDLERS 18 SEER

2, 3, 4 and 5 Tons.

IDIE-8024KU-3 - IDIE-8036KU-3,
IDIE-8048KU-3 - IDIE-8060KU-3.

INSTALLATION INSTRUCTIONS

intensity.mx

MAN-I-IDE-0615

TABLE OF CONTENTS

1.0 SAFETY.....3
2.0 GENERAL.....5
2.1 UNIT DIMENSIONS.....**6**
3.0 APPLICATIONS.....7
3.1 VERTICAL UPFLOW.....**7**
3.2 VERTICAL DOWNFLOW.....**7**
3.3 HORIZONTAL..... **8**
3.4 INSTALLATION IN AN UNCONDITIONED SPACE..... **10**
4.0 ELECTRICAL WIRING.....10
4.1 POWER WIRING.....**10**
4.2 CONTROL WIRING.....**11**
4.3 GROUNDING.....**11**
5.0 AIRFLOW PERFORMANCE.....12
6.0 DUCTWORK.....14
7.0 REFRIGERANT CONNECTIONS.....15
7.1 CONDENSATE DRAIN TUBING.....**15**
8.0 AIR FILTER (not factory-installed).....16
9.0 FILTER INSTALLATION DIMENSIONS 17
10.0 WIRE DIAGRAM.....18

INTENSITY®
Refresh your life

RECOGNIZE THIS SYMBOL AS AN INDICATION OF IMPORTANT SAFETY INFORMATION

⚠ WARNING

These instructions are intended as an aid to qualified licensed service personnel for proper installation, adjustment and operation of this unit. Read these instructions thoroughly before attempting installation or operation. Failure to follow these instruction may result in improper installation,adjustment, service or maintenance possibly resulting in fire, electrical shock, property damage, personal injury or death.

DO NOT DESTROY THIS MANUAL
Please read carefully and keep in a safe place for future reference by a serviceman.

This document is customer property and is to remain with this unit.
These instructions do not cover all the different variations systems nor does it provide for every possible contingency to be met in connection with installtion.
All phases of this installation must comply with NATIONAL STATE AND LOCAL CODES. If additional information is required please contact your local distributor.

1.0 SAFETY

This is a safety alert symbol. When you see this symbol on labels or in manuals, be alert to the potential for personal injury.

This is an attention alert symbol. When you see this symbol on labels or in manuals, be alert to the potential for personal injury.

WARNING

Disconnect all power to unit before installing or servicing. More than one disconnect switch may be required to de-energize the equipment. Hazardous voltage can cause server personal injury or death.

WARNING

If removal of the blower assembly is required, all disconnect switches supplying power to the equipment must be de-energized and locked (if not in sight of unit) so the field power wires can be safely removed from the blower assembly. Failure to do so can cause electrical shock resulting in personal injuring or death.

WARNING

Because of possible damage to equipment or personal injury, installation, service, and maintenance should be performed by a trained, qualified service personnel. Consumer service is recommended only for filter cleaning / replacement. Never operate the unit with the acess panels removed.

WARNING

These instructions are intended as an aid to qualified, licensed service personnel for proper installation, adjustment and operation of this unit. Read these instructions thoroughly before attempting installation or operation. failure to follow these instructions may result in improper installation, adjustment, service or maintenance possibly resulting in fire, electrical shock, property damage, personal injury or death.

INTENSITY® Refresh your life

WARNING

The unit must be permanently grounded. Failure to do so can result in electrical shock causing personal injury or death.

WARNING

PROPOSITION 65: This appliance contains fiberglass insulation. Respirable particles of fiberglass are known to State of California to cause cancer.

All manufacturer products meet current federal OSHA Guidelines for safety. California Proposition 65 warnings are required for certain products, which are not covered by the OSHA standards.

California's Proposition 65 requires warnings for products sold in California that contain or produce any of over 600 listed chemicals known to the State of California to cause cancer or birth defects such as fiberglass insulation, lead in brass, and combustion products from natural gas.

All "new equipment" shipped for sale in California will have labels stating that the product contains and /or produces Proposition 65 chemicals. Although we have not changed our processes, having the same label on all our productd facilitates manufacturing and shipping. We cannot always know "when, or if" products will be sold in the California market.

You may receive inquiries from customers about chemicals found in, or produced by, some of our heating and air-conditioning equipment, or found in natural gas used with some of our products. Listed below are those chemicals and substances commonly associated with similar equipment in our industry and other manufacturers.

Glass Wool (Fiberglass) Insulation
Carbon Monoxide (CO).
Formaldehyde
Benzene

More details are available at the websites for OSHA (Occupational Safety and Health Administration), at www.osha.gov and the State of California's OEHHA (Office of Environmental Health Hazard Assessment), at www.oehha.org. Consumer education is important since the chemicals and substances on the list are found in our daily lives. Most consumers are aware that products present safety and health risks, when improperly used, handled and maintained.

WARNING

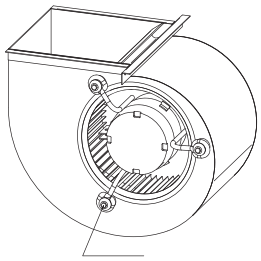

BLOWER MOTOR SHIPPING BOLT

Make sure the blower motor support is tight (3-motor mount bolts) then check to see if wheel is secured to motor shaft before operating unit.

INTENSITY®
Refresh your life

WARNING

The first 36 inches of supply air plenum and ductwork must be constructed of sheet metal as required by NFPA 90B. The supply air plenum or duct must have a solid sheet metal bottom directly under the unit with no openings, registers or flexible air ducts located in it. If flexible supply air ducts are used they may be located only in the vertical walls of rectangular plenum, a minimum of 6 inches from the solid bottom. Metal plenum of duct may be connected to the combustible floor base, if not, it must be connected to the unit supply duct exposed to the supply air opening from the downflow unit. Exposing combustible (non-metal) material to the supply opening of a downflow unit can cause a fire resulting in property damage, personal injury or death.

Exception warning to downflow:

Installations on concrete floor slab with supply air plenum and ductwork completely encased must be not less than 2 inches of concrete (See NFPA 90A).

2.0 GENERAL

The unit can be positioned for bottom return air in the upflow position, left and right return in the horizontal position, top return in downflow position.

This Air Handler provides the flexibility for installation in any upflow or downflow horizontal application. The direct drive motors provides a selection of air volume to match any application. 3-Speed motors provide selections of air flow to meet desired applications.

Top and side power and control wiring, accessible screw terminals for control wiring all combine to make the installation easy, and minimize installation cost. Please contact your local distributor. See Fig.1.

2.1 UNIT DIMENSIONS

NOTE: 25” CLEARANCE IS REQUIRED IN THE FRONT OF THE UNIT FOR FILTER AND COIL MAINTENANCE.

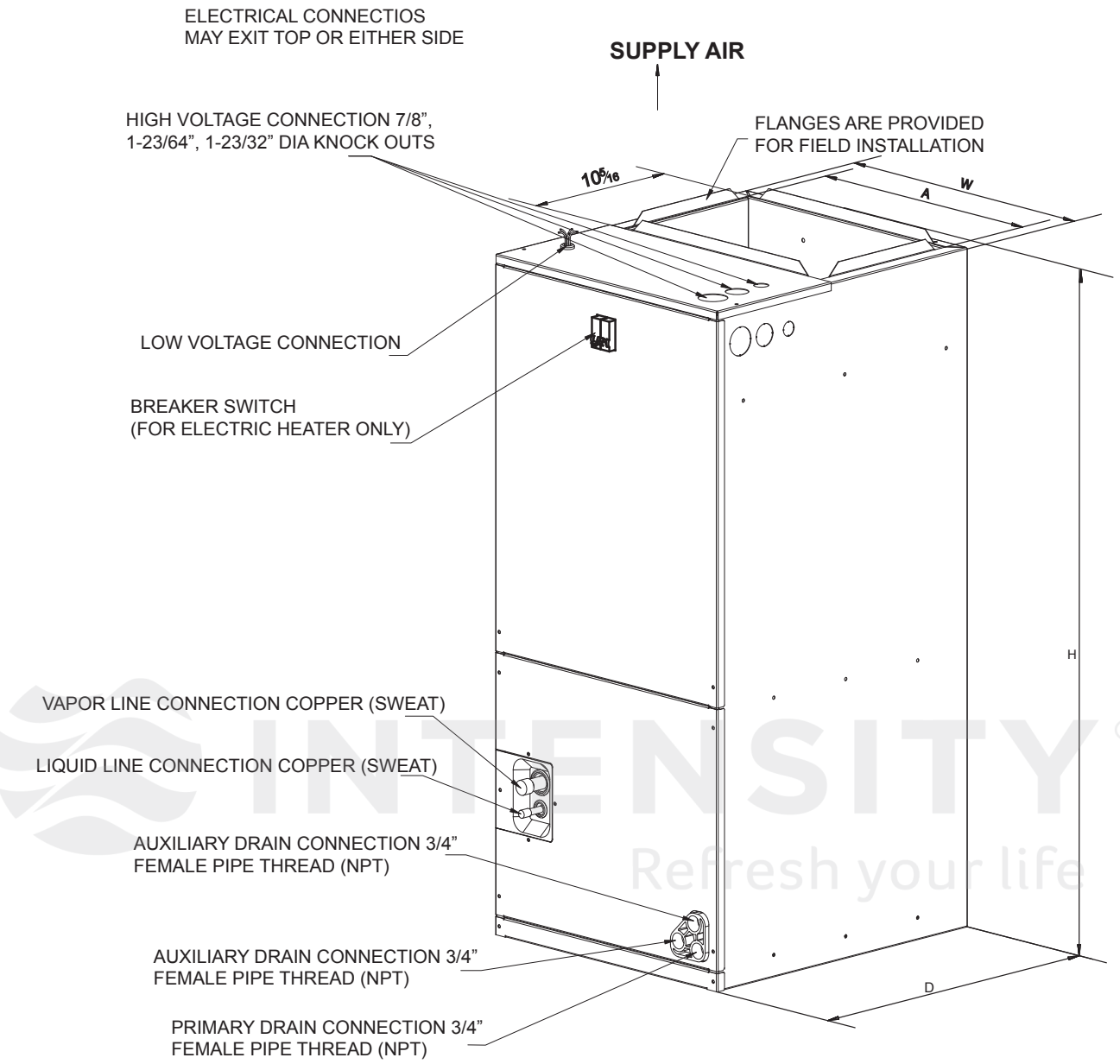

UPFLOW UNIT SHOWN;
UNIT MAY BE INSTALLED UPFLOW, DOWNFLOW, HORIZONTAL RIGHT, OR LEFT AIR SUPPLY.

Fig.1 DIMENSIONS

DIMENSIONAL DATA

MODEL SIZE	Dimensions inch [mm]				
	UNIT HEIGHT "H" IN. [mm]	UNIT WIDTH "W" IN.[mm]	UNIT LENGHT "D" IN.[mm]	SUPPLY DUCT "A"	LIQUID LINE / VAPOR LINE
24	46-1/2"[1180]	19-5/8"[500]	21-5/8"[550]	18"[456]	3/8" / 3/4" [9.5]/[19]
36	54-1/2"[1385]	22"[560]	24"[610]	19-1/2"[496]	3/8" / 3/4" [9.5]/[19]
48	54-1/2"[1385]	22"[560]	24"[610]	19-1/2"[496]	3/8" / 7/8" [9.5]/[22]
60	54-1/2"[1385]	22"[560]	24"[610]	19-1/2"[496]	3/8" / 7/8" [9.5]/[22]

INTENSITY®
Refresh your life

3.0 APPLICATIONS

3.1 VERTICAL UPFLOW

- Vertical Upflow configuration is the factory set on all models (see Fig. 1).
- If a side return air opening is required, field fabricate a return air plenum with an opening large enough to supply unit and strong enough to support unit weight.
- If return air is to be ducted, install duct flush with floor. Use fireproof resilient gasket 1/8 to 1/4 in. thick between the ducts, unit and floor. Set unit on floor over opening.

IMPORTANT NOTE

Torque applied to drain connections should not exceed 15.ft.lbs.(see Fig.1&2)

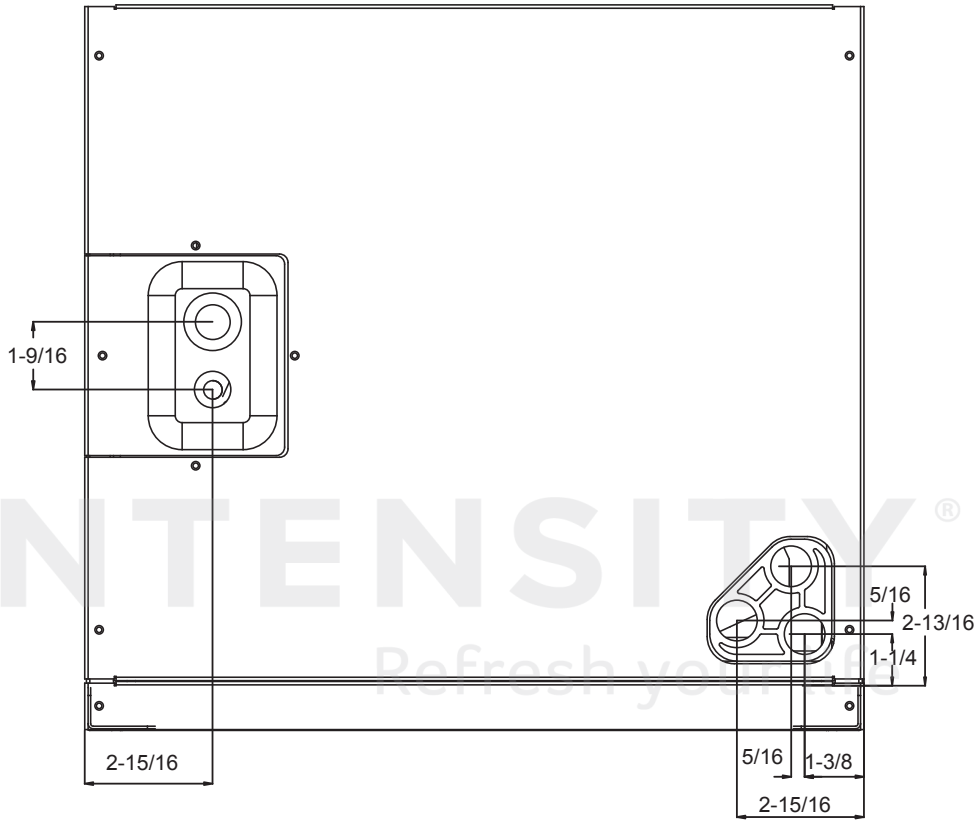

Fig.2 DIMENSIONS FOR FRONT CONNECT COIL

3.2 VERTICAL DOWNFLOW

Conversion to Vertical Downflow: A vertical upflow unit may be converted to the vertical downflow on it. Remove the door and indoor coil and reinstall 180° from original position**.** See Fig. 2~3.

IMPORTANT: To comply with certification agencies and the National Electric Code for horizontal right application, the circuit breaker(s) on field-installed electric heater kits must be re-installed per procedure below so that the breaker switch “on” position and marking is up and, “off” position and marking is down.

- To rotate breaker(s): Rotate one breaker set (circuit) at a time starting with the one on the right. Loosen both lugs on the load side of the breaker. (Make sure that wires are identified and are reinstalled into proper breaker).Wires are bundles with wire ties, one bundle going to the right lug and one bundle going to the left lug.

INTENSITY®
Refresh your life

- Using a screwdriver or pencil, lift blue plastic tab with hole away from breaker until breaker releases from mounting opening.
- With breaker held in hand, rotate breaker so that “on” position is up, “off” position is down with unit in planned vertical mounting position. insert right wire bundle into top right breaker lug, ensuring all strands of all wires are inserted fully into lug, and no wire insulation is in lug.
- Tighten lug as tight as possible while holding circuit breaker. Check wires and make sure each wire is secure and none are loose. Repeat for left wire bundle in left top circuit breaker lug.
- Replace breaker by inserting breaker mounting tab opposite white pull tab in opening, hook mounting tab over edge in opening.
- With screwdriver or pencil, pull blue tab with hole away from breaker while setting that side of breaker into opening. When breaker is in place, release tab, locking circuit breaker into location in opening.
- Repeat above operation for remaining breaker(s) (if more than one is provided).
- Replace single point wiring jumper bar, if it is used, on line side of breaker and tighten securely.
- Double check wires and lugs to make sure all are secure and tight. Check to make sure unit wiring to circuit breaker load lugs match that shown on the unit wiring diagram.

CAUTION

When using the unit with electrical heater, the switch is used only for electrical heater on the front of panel.

INTENSITY®
Refresh your life

3.3 HORIZONTAL

Horizontal right is the default factory configuration for the units.

Horizontal left isn’t the default factory configuration for the units.

Conversion to Horizontal: A vertical upflow unit may be converted to horizontal right by removing indoor coil assembly and reinstalling coil as shown for right hand air supply. And reinstall coil in unit as shown for right hand air supply.

- Rotate unit into the downflow position, with the coil compartment on top and the blower compartment on bottom. See Fig. 3.
- Reinstall the indoor coil 180° from original position. Ensure the retaining channel is fully engaged with the coil rail. See Fig. 3.
- Secondary drain pan kits are required when the unit is configured for the horizontal right position over a finished ceiling and/or living space.

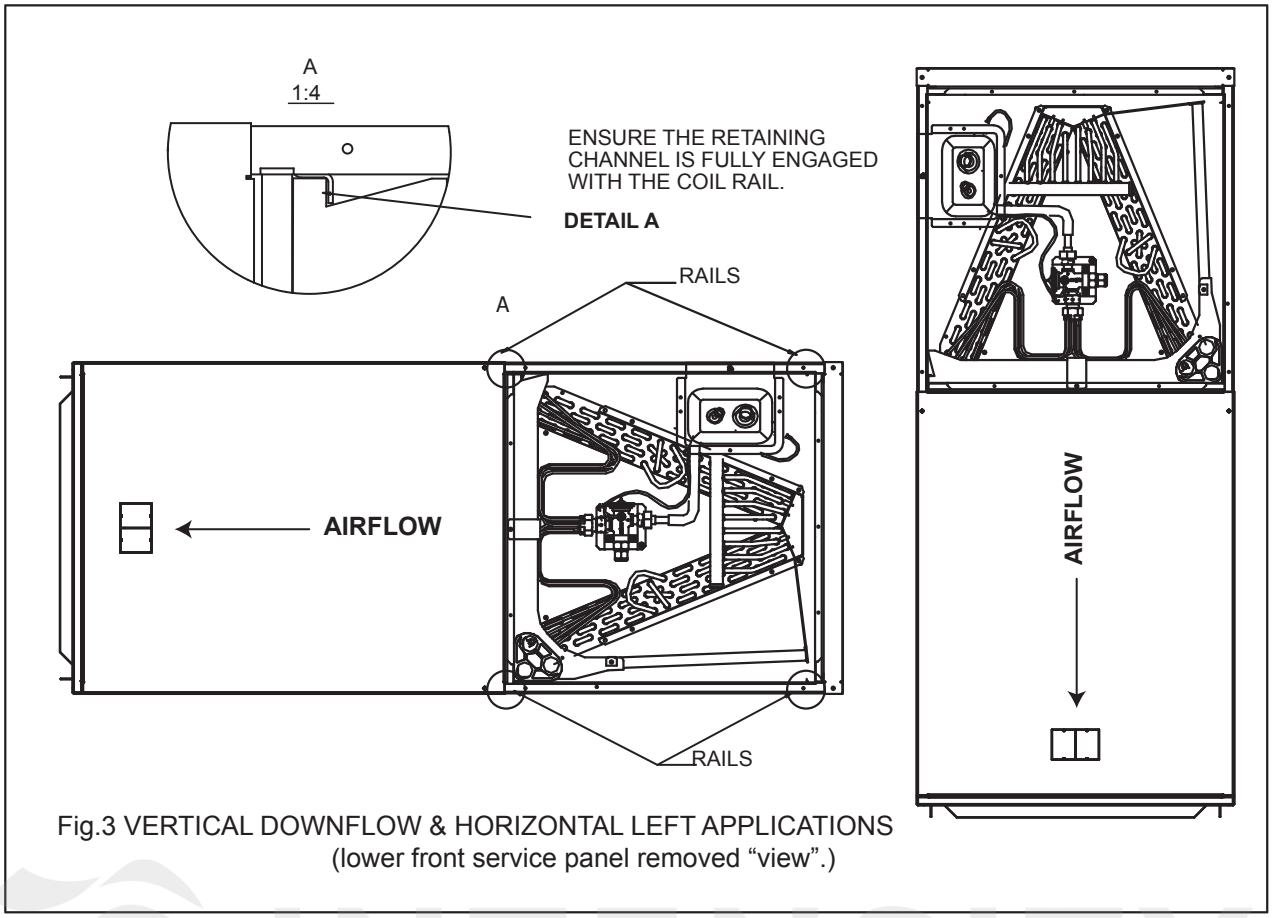

Fig.3 VERTICAL DOWNFLOW & HORIZONTAL LEFT APPLICATIONS
(lower front service panel removed “view”.)

INTENSITY®
Refresh your life

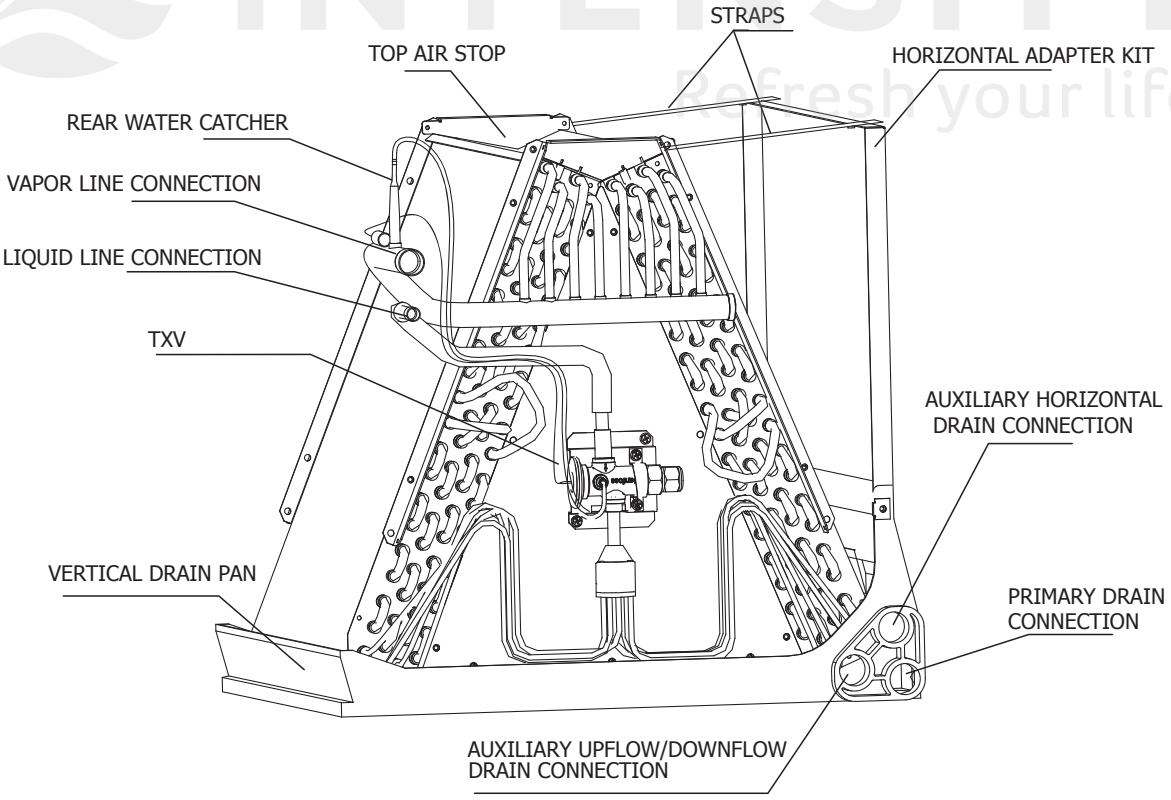

Fig.10 INDOOR COIL AND DRAIN PAN SET-UP

CAUTION

Horizontal units must be configured for right hand air supply or left hand air supply. Horizontal drain pan must be located under indoor coil. Failure to use the drain pan can result in property damage.

Conversion in Horizontal Direction: Horizontal left-hand supply can be changed to horizontal right-hand supply by removing the indoor coil and reinstalling 180° from original.

3.4 INSTALLATION IN AN UNCONDITIONED SPACE

IMPORTANT: There are two pairs of coil rails in the air handler for default and counter flow application. If the air handler is installed in an unconditioned space, the two unused coil rails should be removed to minimize air handler surface sweating. The coil rails can be easily removed by taking off the 6 mounting screws from both sides of the cabinet.

4.0 ELECTRICAL WIRING

Field wiring must comply with the National Electric Code (C.E.C. in Canada) and any applicable local ordinance.

WARNING

Disconnect all power to unit before installing or servicing. More than one disconnect switch may be required to de-energize the equipment. Hazardous voltage can cause severe personal injury or death.

4.1 POWER WIRING

It is important that proper electrical power is available for connection to the unit model being installed. See the unit nameplate, wiring diagram and electrical data in the installation instructions.

- If required, install a branch circuit disconnect of adequate size, located within sight of, and readily accessible to the unit.
- **IMPORTANT**: After the Electric Heater is installed, units may be equipped with one, two, or three 30/60 amp. circuit breakers. These breaker(s) protect the internal wiring in the event of a short circuit and serve as a disconnect. Circuit breakers installed within the unit do not provide over-current protection of the supply wiring and therefore may be sized larger than the branch circuit protection.
- Supply circuit power wiring must be 75°C minimum copper conductors only. See Electrical Data In this section for ampacity, wire size and circuit protector require ment. Supply circuit protective devices may be either fuses or “HACR” type circuit breakers.
- Power wiring may be connected to either the right, left side or top. Three 7/8”, 1-3/8”, 1-3/4” dia. concentric knockouts are provided for connection of power wiring to unit.
- Power wiring is connected to the power terminal block in unit electric cabinet.

4.2 CONTROL WIRING

IMPORTANT: Class 2 low voltage control wiring should not be run in conduit with main power wiring and must be separated from power wiring, unless class 1 wire of proper voltage rating is used.

- Low voltage control wiring should be 18 Awg. color-coded. For lengths longer than 100 ft., 16 Awg. wire should be used.
- Low voltage control connections are made to low voltage pigtails extending from top of air handler (upflow position - see Figure 3). Connections for control wiring are made with wire nuts. Control wiring knockouts (518 and 7/8) are also provided on the right and left side of the unit for side connection.
- See wiring diagrams attached to indoor and outdoor sections to be connected.
- Make sure, after installation, separation of control wiring and power wiring has been maintained.

4.3 GROUNDING

WARNING

The unit must be permanently grounded. Fallure to do so can result In electrical shock causing personal injury or death.

INTENSITY®
Refresh your life

- Grounding may be accomplished by grounding metal conduit when installed in accordance with electrical codes to the unit cabinet.
- Grounding may also be accomplished by attaching ground wire(s) to ground lug(s) provided in the unit wiring compartment.
- Ground lug(s) are located close to wire entrance on left side of unit (up-flow). Lug(s) may be moved to marked locations near wire entrance on right side of unit (upflow). If alternate location is more convenient.
- Use of multiple supply circuits require grounding of each circuit to lug(s) provided in unit.

5.0 AIRFLOW PERFORMANCE

Airflow performance data is based on cooling performance with a coil and no filter in place. Select performance table for appropriate unit size external static applied to unit allows operation within the minimum and maximum limits shown in table below for both cooling and electric heat operation.

PSC-Airflow Performance (Standard CFM)

Model Number	Motor Speed		CFM(Watts) External Static Pressure-Inches W.C.[kPa]									
			0[0]	0.1[.02]	0.16[.04]	0.2[.05]	0.3[.07]	0.4[.10]	0.5[.12]	0.6[.15]	0.7[.17]	0.8[.20]
24	Low	CFM	601	528	475	466	406	—	—	—	—	—
		RPM	396	479	542	558	637	—	—	—	—	—
		Watts	123.7	121.2	119	118.3	114.8	—	—	—	—	—
		Amps	0.61	0.61	0.6	0.6	0.59	—	—	—	—	—
	Middle	CFM	701	650	609	602	547	489	422	—	—	—
		RPM	480	544	596	609	672	737	789	—	—	—
		Watts	145	143	141	141	137	133	129.2	—	—	—
		Amps	0.68	0.67	0.67	0.67	0.66	0.65	0.64	—	—	—
	High	CFM	943	894	861	853	805	754	694	619	521	436
		RPM	623	670	707	717	764	805	849	896	941	973
		Watts	281	276	273	272	266	261	255	246	237	229
		Amps	1.32	1.31	1.30	1.30	1.28	1.27	1.25	1.23	1.21	1.18
36	Low	CFM	1077	1031	986	964	885	811	735	—	—	—
		RPM	504	573	628	651	712	763	806	—	—	—
		Watts	308	299	289	286	275	266	256	—	—	—
		Amps	1.37	1.34	1.3	1.29	1.26	1.23	1.2	—	—	—
	Middle	CFM	1268	1220	1171	1150	1115	1045	898	816	736	—
		RPM	582	636	686	707	735	781	846	884	916	—
		Watts	334	327	318	316	310	302	285	275	265	—
		Amps	1.47	1.44	1.41	1.40	1.38	1.35	1.29	1.26	1.22	—
	High	CFM	1534	1478	1427	1407	1350	1306	1238	1044	941	845
		RPM	683	723	765	782	807	842	876	938	964	989
		Watts	461	451	441	434	427	416	406	373	360	344
		Amps	2.04	2.00	1.97	1.94	1.92	1.88	1.84	1.74	1.69	1.65
48	Low	CFM	1323	1269	1182	1105	1031	949	863	—	—	—
		RPM	486	558	620	668	680	773	816	—	—	—
		Watts	434	428	413	403	390	376	360	—	—	—
		Amps	1.96	1.91	1.87	1.78	1.72	1.66	1.62	—	—	—
	Middle	CFM	1600	1544	1467	1390	1307	1232	1138	1064	—	—
		RPM	604	658	714	745	760	802	878	917	—	—
		Watts	486	473	463	451	438	424	406	390	—	—
		Amps	2.17	2.12	2.08	2.03	1.96	1.88	1.82	1.76	—	—
	High	CFM	1792	1740	1672	1572	1476	1422	1368	1296	1048	971
		RPM	699	744	788	820	828	862	895	925	992	1013
		Watts	591	578	564	549	532	514	495	445	408	394
		Amps	2.37	2.34	2.31	2.28	2.24	2.25	2.22	2.19	2.11	2.08
60	Low	CFM	1379	1348	1295	1264	1254	1206	—	—	—	—
		RPM	650	695	738	764	773	807	—	—	—	—
		Watts	486	469	457	447	443	430	—	—	—	—
		Amps	1.6	1.59	1.57	1.55	1.55	1.51	—	—	—	—
	Middle	CFM	1671	1629	1576	1535	1524	1469	1409	1332	—	—
		RPM	761	803	835	857	863	888	912	944	—	—
		Watts	531	515	505	496	494	480	466	446	—	—
		Amps	2.60	2.32	2.28	2.25	2.24	2.21	2.16	2.11	—	—
	High	CFM	1943	1886	1828	1774	1757	1695	1628	1555	1456	1244
		RPM	874	901	922	942	945	960	978	995	1018	1051
		Watts	700	667	649	634	630	612	601	584	557	514
		Amps	3.18	3.09	3.03	2.98	2.97	2.92	2.89	2.84	2.77	2.65

ECM-Airflow Performance (Standard CFM)

Model Number	Motor Speed		SCFM(Watts) External Static Pressure-Inches W.C.[kPa]									
			0[0]	0.1[.02]	0.16[.04]	0.2[.05]	0.3[.07]	0.4[.10]	0.5[.12]	0.6[.15]	0.7[.17]	0.8[.20]
24	Tap(5)	SCFM	1016	955	924	914	870	827	790	741	691	657
		Watts	138.8	146.1	155.8	157.1	164.9	174.1	184.8	194.9	201.4	209.2
	Tap(4)	SCFM	955	892	863	853	804	768	729	671	630	---
		Watts	118.1	124.7	134.2	135.4	141.6	151.9	161.8	168.6	178.4	---
	Tap(3) -Factory	SCFM	927	829	791	789	739	701	643	597	---	---
		Watts	109.0	104.6	111.7	114.9	120.5	130.6	136.5	146.6	---	---
	Tap(2)	SCFM	887	766	683	671	631	567	522	465	---	---
		Watts	97.3	87.1	82.4	83.3	93.0	98.6	107.5	111.7	---	---
	Tap(1)	SCFM	829	698	589	547	366	347	277	234	---	---
		Watts	80.5	71.1	63.2	59.5	53.8	60.3	64.1	72.1	---	---
36	Tap(5)	SCFM	1532	1471	1428	1386	1372	1327	1271	1210	1159	1101
		Watts	233	247	262.1	265.6	269.6	274.8	281.2	290.4	298.1	310.3
	Tap(4)	SCFM	1408	1343	1297	1265	1246	1197	1141	1073	1015	880
		Watts	197.1	209.2	213.7	219.3	221.9	227.2	238.3	245.2	255.9	273.1
	Tap(3) -Factory	SCFM	1326	1230	1174	1151	1107	1024	896	828	807	726
		Watts	147.9	164.6	172.2	175.4	183	189.7	201.8	216.9	221.1	224.9
	Tap(2)	SCFM	1236	1175	1100	1075	1029	963	835	736	661	582
		Watts	124.3	130.1	133.1	136.9	142.1	145.7	156.5	167.9	176.4	186.7
	Tap(1)	SCFM	1182	1141	1020	995	944	818	648	553	461	363
		Watts	123.9	112.4	105.1	103.2	106.5	112.1	123.5	129.1	139.6	148.9
48	Tap(5)	SCFM	2032	1985	1948	1935	1901	1854	1810	1761	1711	1656
		Watts	431.2	449.2	446.3	461.6	481.1	495.6	509.5	523.1	537.2	551.4
	Tap(4)	SCFM	1769	1716	1682	1668	1630	1583	1535	1479	1423	1381
		Watts	296.2	310.5	324.3	328.1	338.8	353.3	367.3	318.1	396.4	409.1
	Tap(3) -Factory	SCFM	1516	1470	1427	1413	1378	1307	1252	1198	1147	1030
		Watts	193.1	209.7	221.6	223.1	235.3	248.9	263.2	276.6	290.1	314.1
	Tap(2)	SCFM	1375	1258	1227	1199	1155	1139	1074	1020	964	896
		Watts	150.8	145.8	148.5	158.3	168.9	170.2	183.6	195.8	212.8	224.9
	Tap(1)	SCFM	1337	1205	1165	1044	984	965	904	786	731	697
		Watts	139	128.2	123.8	122.4	131.9	133.6	144.7	160.7	171.5	177.8
60	Tap(5)	SCFM	2028	1982	1938	1928	1895	1852	1804	1759	1709	1654
		Watts	444.8	462.7	479.3	485.6	494.2	508.4	521.6	535.1	549.8	558.9
	Tap(4) -Factory	SCFM	1773	1726	1678	1661	1631	1584	1534	1480	1432	1381
		Watts	305.1	320.8	334.3	338.7	350.7	364.2	378.2	392.6	404.7	410.9
	Tap(3)	SCFM	1528	1473	1421	1408	1382	1317	1266	1201	1148	1072
		Watts	205.1	218.9	232.1	235.3	243.1	258.6	271.2	279.3	290.1	305.8
	Tap(2)	SCFM	1375	1258	1227	1199	1155	1139	1074	1020	964	896
		Watts	150.8	145.8	148.5	158.3	168.9	170.2	183.6	195.8	212.8	224.9
	Tap(1)	SCFM	1337	1205	1165	1044	984	965	904	786	731	697
		Watts	139	128.2	123.8	122.4	131.9	133.6	144.7	160.7	171.5	177.8

--- Shaded boxes represent airflow outside the required 300-450 cfm/ton.

NOTES: Airflow based upon cooling performance at 230V with no electric heat and no filter. airflow at 208V is approximately the same as 230V because the mult-tap ECM motor is a constant torque motor. The torque doesn't drop off at the speeds in which the motor operates.

The air distribution system has the greatest effect on airflow. The duct system is totally controlled by the contractor. For this reason, the contractor should use only industry-recognized procedures.
Heat pump systems require a specified airflow. Each ton of cooling requires between 350 and 450 cubic feet of air per minute (CFM), or 400 CFM nominally.
Duct design and construction should be carefully done. System performance can be lowered dramatically through bad planning or workmanship.
Air supply diffusers must be selected and located carefully. They must be sized and positoined to deliver treated air along the perimerter of the space. If they are too small for their intended airflow, they become noisy. If they are not located properly, they cause drafts. Reture air grilles must be properly sized to carry air back to the blower.If they are too small, they also cause noise.
The installers should balance the air distribution system to ensure proper quiet airflow to all rooms in the home. This ensures a comfortable living space.
An air velocity meter or airflow hood can give a reading of system CFM.

6.0 DUCTWORK

Field ductwork must comply with the National Fire Protection Association NFPA 90A, NFPA 90B and any applicable local ordinance.

WARNING

Do not, under any circumstances, connect return ductwork to any other heat producing device such as fireplace insert, stove, etc. Unauthorized use of such devices may result in fire, carbon monoxide poisoning, explosion, personal injury or property damage.

Sheet metal ductwork run in unconditioned spaces must be insulated and covered with a vapor barrier. Fibrous ductwork may be used if constructed and installed in accordance with SMACNA Construction Standard on Fibrous Glass Ducts. Ductwork must comply with National Fire Protection Association as tested by U/L Standard 181 for Class I Air Ducts. Check local codes for requirements on ductwork and insulation.

- Duct system must be designed within the range of external static pressure the unit is designed to operate against. It is important that the system airflow be adequate. Make sure supply and return ductwork, grills, special filters, accessories, etc. are accounted for in total resistance. See airflow performance tables in this manual.
- Design the duct system in accordance with “ACCA” Manual “0” Design for Residential Winter and Summer Air Conditioning and Equipment Selection. Latest editions are available from: “ACCA” Air Conditioning Contractors of America, 1513 16th Street, N.W., Washington, D.C. 20036. If duct system incorporates flexible air duct, be sure pressure drop Information (straight length plus all turns) shown in “ACCA” Manual “D” is accounted for in system.
- Supply plenum is attached to the 3/4” duct flanges supplied with the unit. Attach flanges around the blower outlet.

  IMPORTANT: If an elbow is included in the plenum close to the unit, it must not be smaller than the dimensions of the supply duct flange on the unit.
- **IMPORTANT:** The front flange on the return duct if connected to the blower casing must not be screwed into the area where the power wiring is located. Drills or sharp screw points can damage insulation on wires located inside unit.
- Secure the supply and return ductwork to the unit flanges, using proper fasteners for the type of duct used and tape the duct-to-unit joint as required to prevent air leaks.

7.0 REFRIGERANT CONNECTIONS

Keep the coil connections sealed until refrigerant connections are made. See the Installation Instructions for the outdoor unit for details on line sizing, tubing installation, and charging information.

Coil is shipped with “No charge”. Evacuate the system before charging with refrigerant.

Install refrigerant tubing so that it does not block service access to the front of the unit.

Nitrogen should flow through the refrigerant lines while brazing.

Use a brazing shield to protect the cabinet’s paint and a wet rag to protect the rubber grommet from being damaged by torch flames. After the refrigerant connections are made, seal the gap around the connections with pressure sensitive gasket.

7.1 CONDENSATE DRAIN TUBING

Consult local codes for specific requirements.

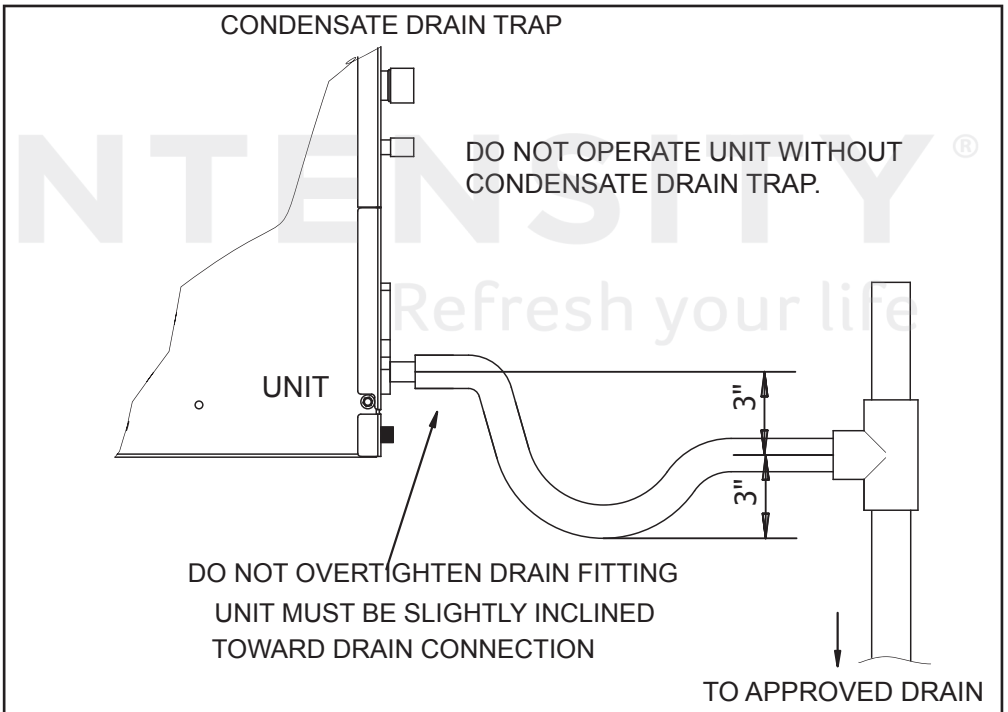

Fig. 5 CONDENSATE DRAIN TRAP

IMPORTANT:
1. When making drain fitting connections to the drain pan, use a thin layer of Teflon paste, silicone or Teflon tape and install, hand tighten.
2. When making drain fitting connections to drain pan, do not overtighten. Over tightening fittings can split pipe connetions on the drain pan.

INTENSITY® Refresh your life

- Install drain lines so they do not block service access to front of the unit. Minimum clearance of 24 inches is required for filter, coil or blower removal and service access.
- Make sure unit is level or pitched slightly toward primary drain connection so that water will drain completely from the pan. (See Fig. 5)
- Do not reduce drain line size less than connection size provided on condensate drain pan.
- All drain lines must be pitched downward away from the unit a minimum of 1/8” per foot of line to ensure proper drainage.
- Do not connect condensate drain line to a closed or open sewer pipe. Run condensate to an open drain or run line to a safe outdoor area.
- The drain line should be insulated where necessary to prevent sweating and damage due to condensate forming on the outside surface of the line.
- Make provisions for disconnecting and cleaning of the primary drain line should it become necessary. Install a 3 inch trap in the primary drain line as close to the unit as possible. Make sure that the top of the trap is below connection to the drain pan to allow complete drainage of pan (See Fig. 5).
- Auxiliary drain line should be run to a place where it will be noticeable if it becomes operational. Homeowner should be warned that a problem exists if water should begin running from the auxiliary drain line.
- Plug the unused drain connection with the plugs provided in the parts bag, using a thin layer of teflon paste, silicone or teflon tape to form a water tight seal.
- Test condensate drain pan and drain line after installation is complete. Pour water into drain pan, enough to fill drain trap and line. Check to make sure drain pan is draining completely, no leaks are found in drain line fittings, and water is draining from the termination of the primary drain line.

8.0 AIR FILTER (not factory-installed)

- External filter or other means of filtration is required. Units should be sized for a maximum of 300 feet/min. air velocity or what is recommended for the type filter installed.

Filter application and placement are critical to airflow, which may affect the heating and cooling system performance. Reduced airflow can shorten the life of the system’s major components, such as motor, limits, elements, heat relays, evaporator coil or compressor. Consequently, we recommend that the return air duct system have only one filter location. For systems with a return air filter grill or multiple filter grills, can have a filter installed at each of the return air openings.

If adding high efficiency filters or electronic air filtration systems, it is very important that the air flow is not reduced. If air flow is reduced the overall performance and efficiency of the unit will be reduced. It is strongly recommended that a profesional installation technician is contacted to ensure installation of these such filtration systems are installed correctly.

IMPORTANT: DO NOT DOUBLE FILTER THE RETURN AIR DUCT SYSTEM. DO NOT FILTER THE SUPPLY AIR DUCT SYSTEM.THIS WILL CHANGE THE PERFORMANCE OF THE UNIT AND REDUCE AIRFLOW .

WARNING

Do not operate the system without filters. A portion of the dust entrained in the air may temporarily lodge In the duct runs and at the supply registers. Any circulated dust particles could be heated and charred by contact with the air handler elements. This residue could soil ceilings, walls, drapes, carpets and other articles in the house.
Soot damage may occur with filters in place, when certain types of candles, oil lamps or standing pilots are burned.

9.0 FILTER INSTALLATION DIMENSIONS

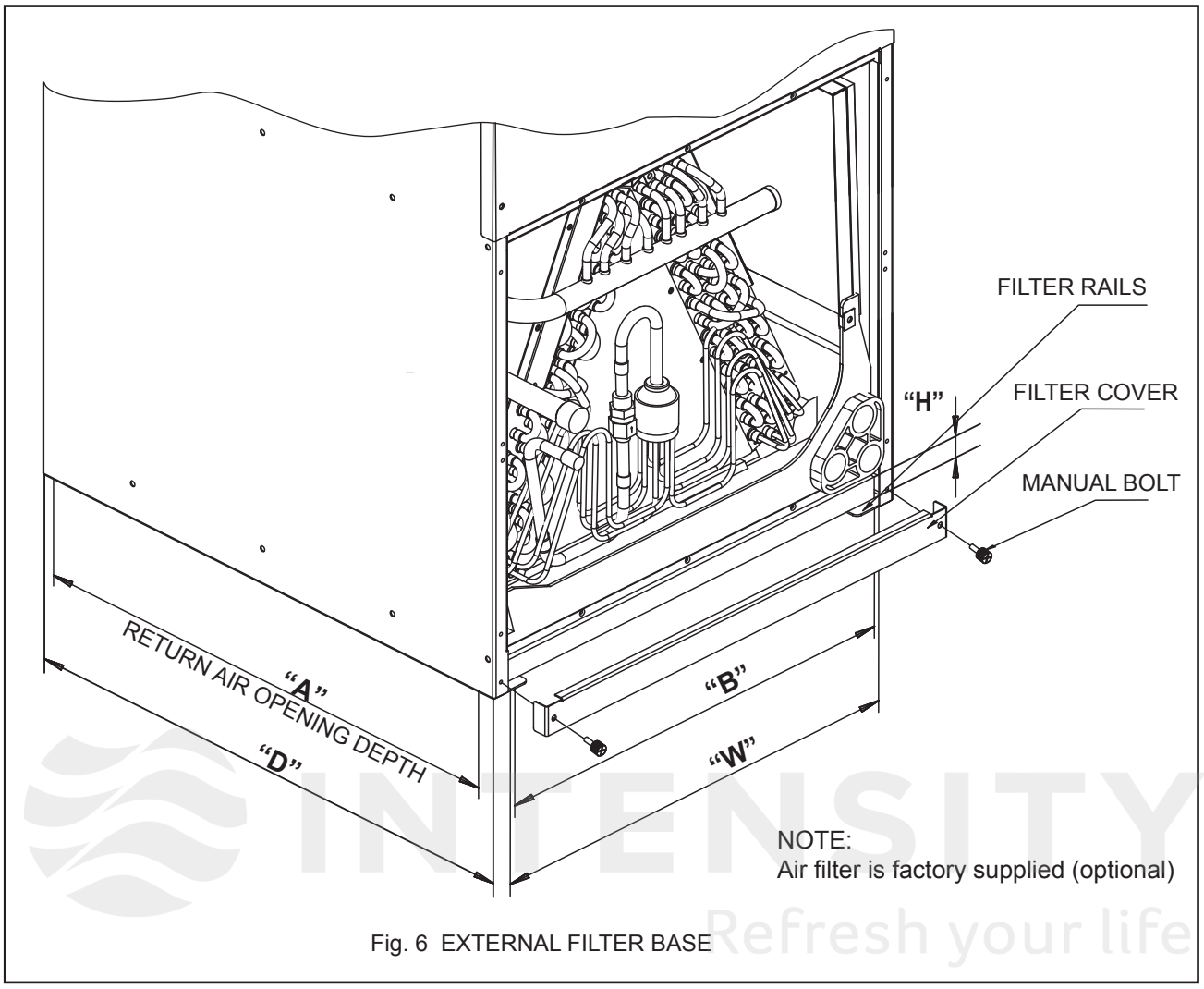

Fig. 6 EXTERNAL FILTER BASE

DIMENSIONAL DATA

MODEL	FILTER SIZE IN [mm]	"W" IN [mm]	"D" IN [mm]	"H" IN [mm]	Return width "A" IN	Return length "B" IN
24	18X20[457X508]	18.3[466]	21.6[548]	1[25.4]	20.8	16.3
36/48/60	20X22[508X559]	20.7[526]	23.9[608]	1[25.4]	23	18.8

- AIR FILTER REMOVAL

1.Remove bolts manually, remove air filter recover, see in Fig. 6;
2. Hold the edge of the air filter and extract out .
3. Clean the air filter (Vacuum cleaner or pure water may be used to clean the air filter. If the dust accumulation is too heavy, use soft brush and mild detergent to clean it and dry out in cool place) .

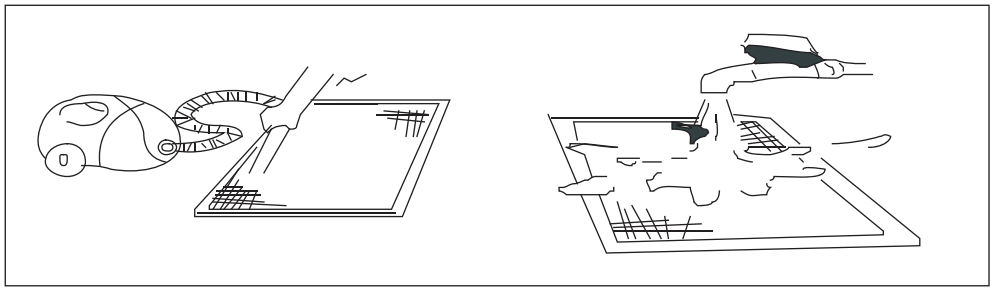

10.0 WIRING DIAGRAM

1. To avoid the electrical shock, please connect the air conditioner with the ground lug. The main power plug in the air conditioner has been joined with the ground wiring, please don't change it freely.

2. The power socket is used as the air conditioner specially.

3. Don't pull the power wiring hard.

4. When connecting the air conditioner with the ground, observe the local codes.

5. If necessary, use the power fuse or the circuit, breaker or the corresponding scale ampere.

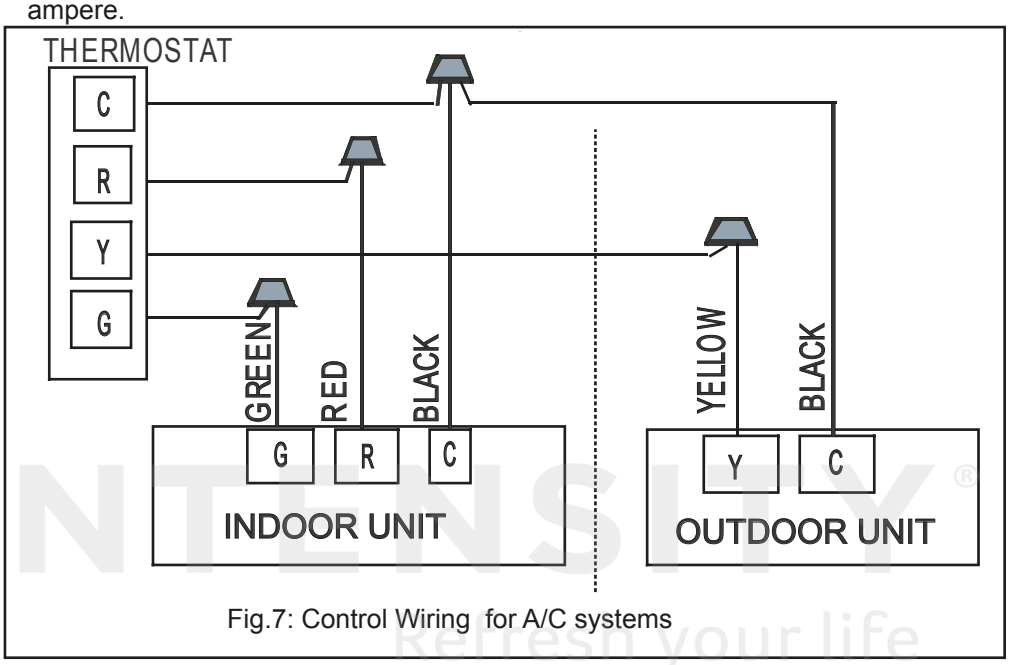

Fig.7: Control Wiring for A/C systems

Suggestion: Thermostat choose KJR-23B or Non-programmed eletrical thermostat series of Honeywell, such as TH 5220D. Wiring please refer to the Owner's Manual of the thermostat.

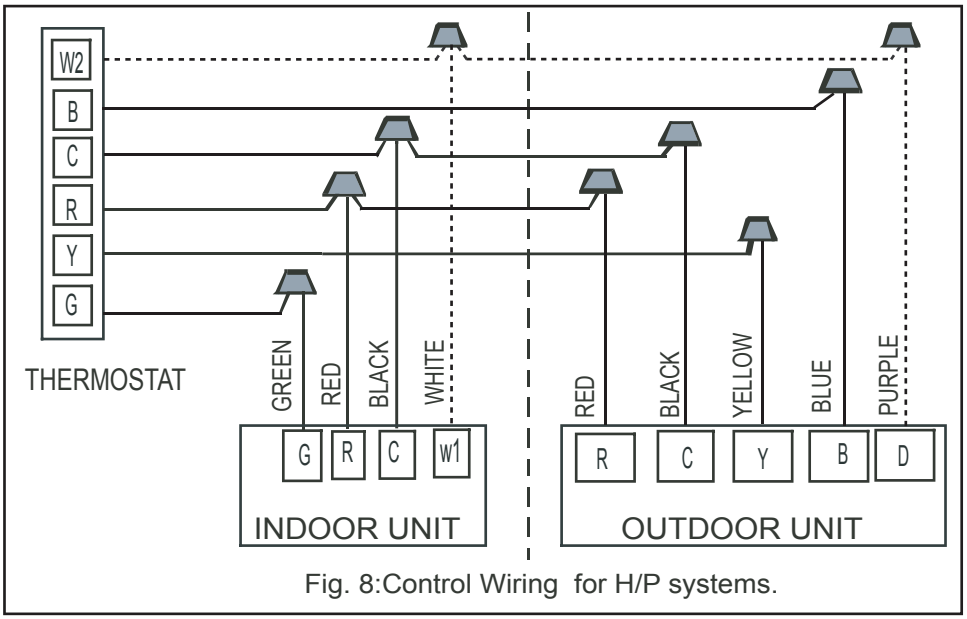

Fig. 8:Control Wiring for H/P systems.

Suggestion: Thermostat choose KJR-25B or Non-programmed eletrical thermostat series of Honeywell, such as TH 5220D. Broken lines means H/P system with electric heating. Wiring please refer to the Owner's Manual of the thermostat.

INTENSITY® Refresh your life

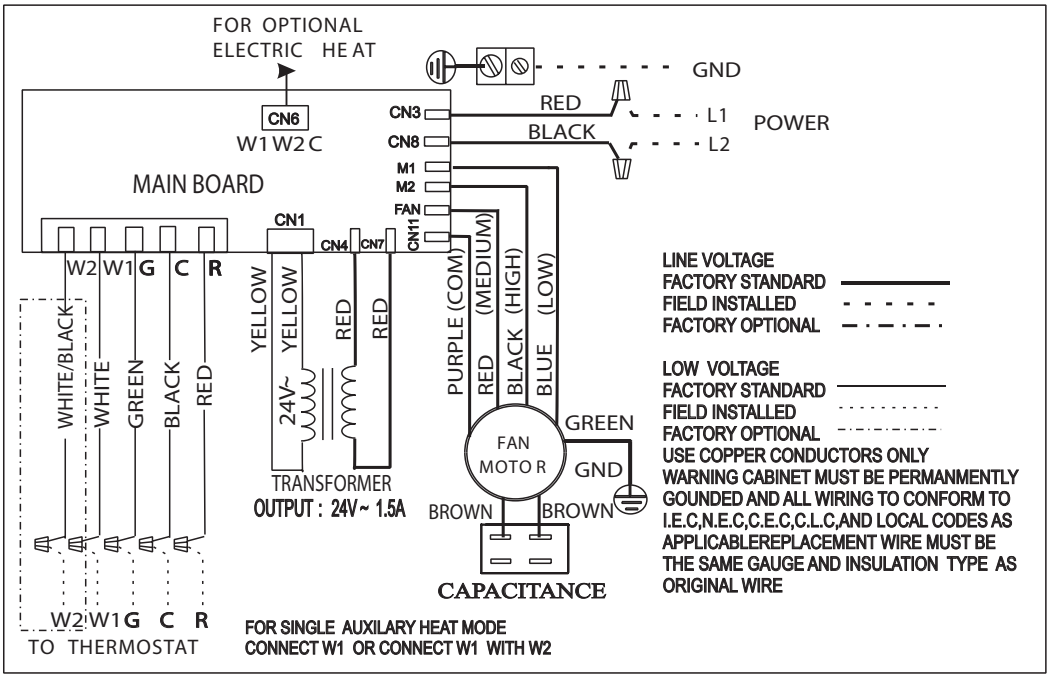

Fig.10: Indoor Unit Wiring Diagram for PSC Motor A/C systems and H/P systems.

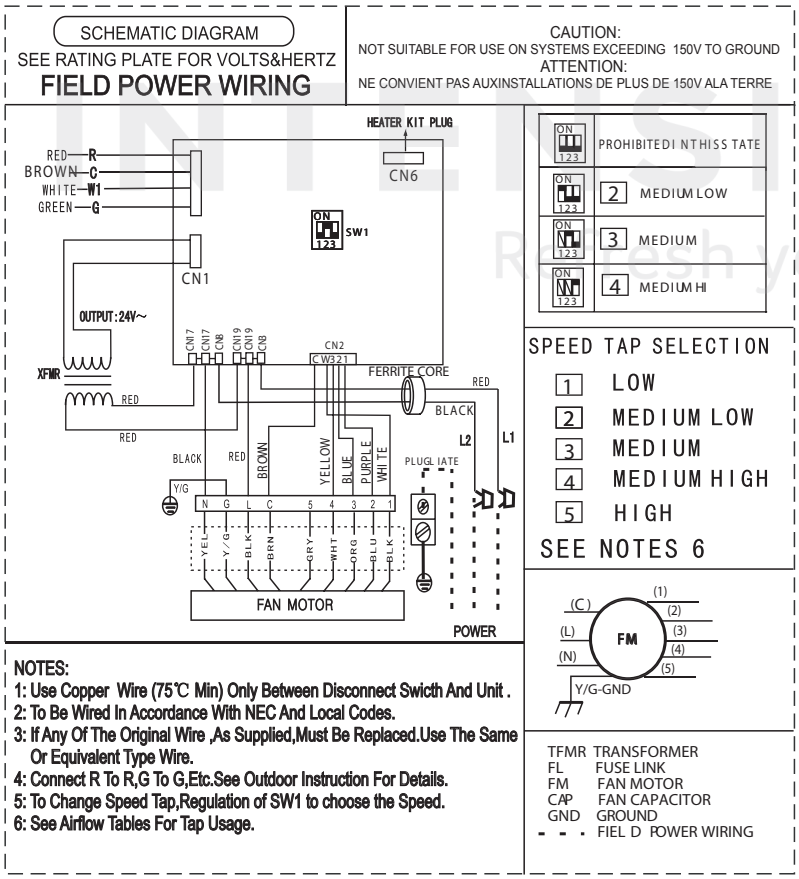

Fig.11: Indoor Unit Wiring Diagram for ECM Motor (24K/36K/48K).

INTENSITY®
Refresh your life

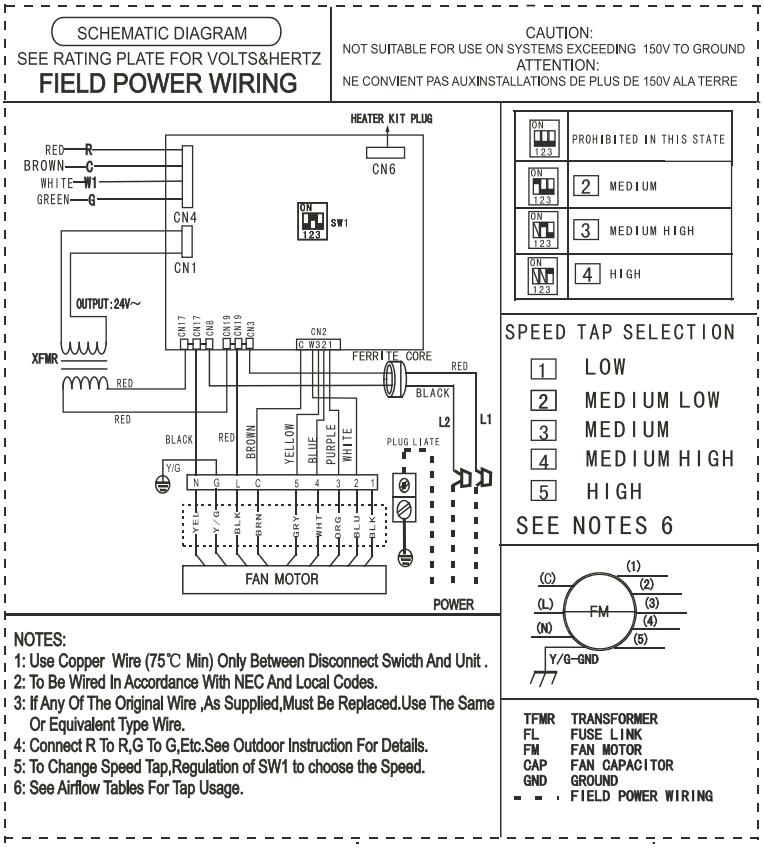

Fig.12: Indoor Unit Wiring Diagram for ECM Motor (60K).

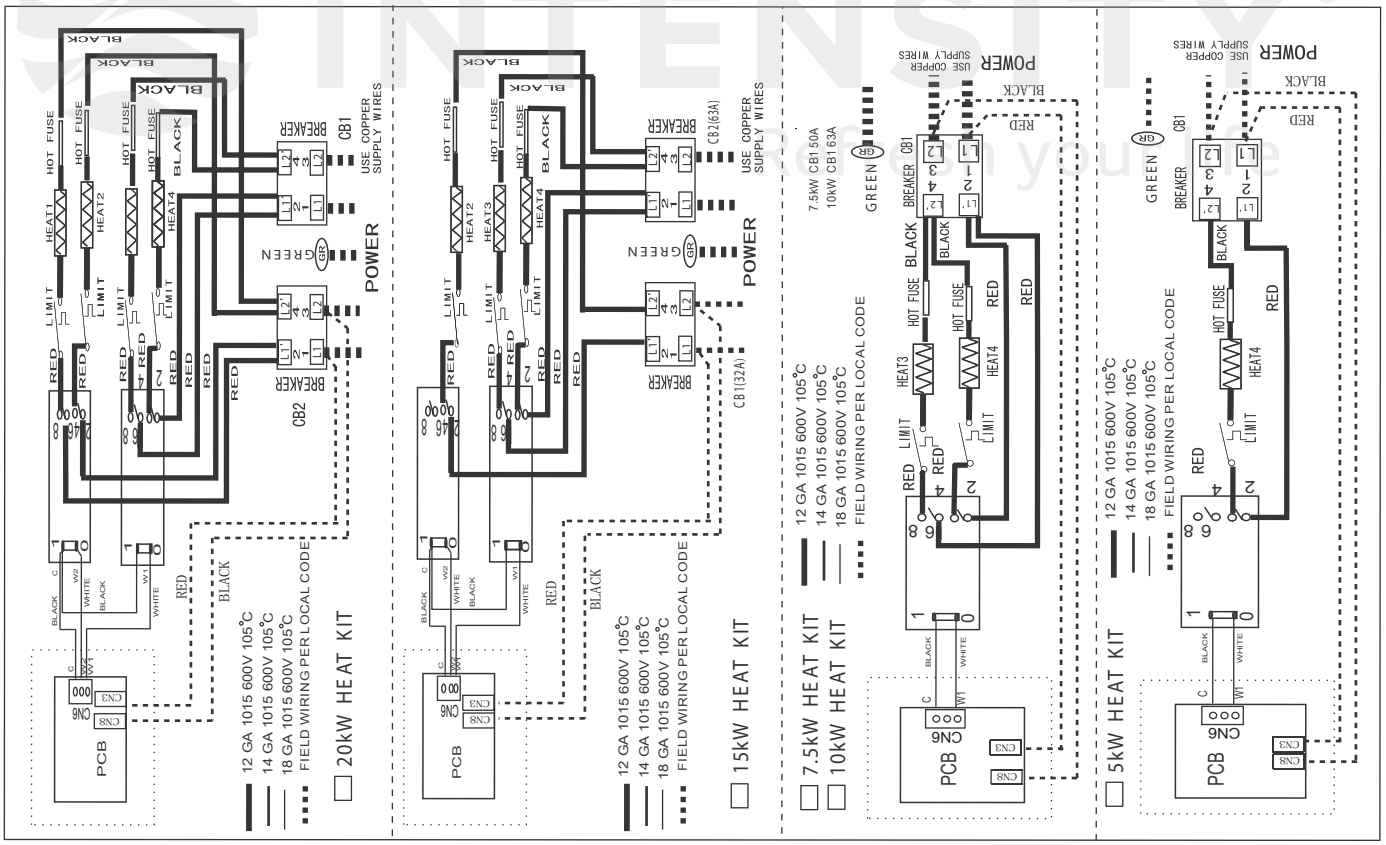

Fig.13: Indoor Unit Wiring Diagram for Electric Heat.