INTENSITY®

Refresh your life

# WIRED REMOTE CONTROLLER

## KJR-86C-E

# INSTALLATION & OWNER´S MANUAL

Please read this manual carefully before operation and keep it for future reference.

intensity.mx

MAN-O-KJR86C-0615

- This manual gives detailed description of the precautions that should be brought to your attention during operation.

- In order to ensure correct service of the wired controller please read this manual carefully before using the unit.

- For convenience of future reference, keep this manual after reading it.

INTENSITY
Refresh your life

CONTENTS

PAGE


INSTALLATION

I. SAFETY PRECAUTIONS.....2

II. OTHER PRECAUTIONS.....4

III. INSTALLATION PROCEDURE..... 6

IV. WIRING FIGURE OF THE WIRED REMOTE CONTROLLER CONNECT WITH THE INDOOR UNIT.....9

OPERATION

I. MAIN PARAMETERS.....15

II. MAIN FUNCTIONS.....15

III. NAMES AND FUNCTIONS OF KEYS.....16

IV. OPERATION METHOD.....17



INTENSITY®

Refresh your life

# INSTALLATION

INTENSITY®
Refresh your life

# I. SAFETY PRECAUTIONS

The following contents are stated on the product and the operation manual, including usage, precautions against personal harm and property loss, and the methods of using the product correctly and safely. After fully understanding the following contents (identifiers and icons), read the text body and observe the following rules.

■ Identifier description

| Identifier | Meaning |
|---|---|
| Warning | Means improper handling may lead to personal death or severe injury. |
| Caution | Means improper handling may lead to personal injury or property loss. |

[Note]: 1. “Harm” means injury, burn and electric shock which need long-term treatment but need no hospitalization

2. “Property loss” means loss of properties and materials.

## ■ Icon description

| Icon | Meaning |
|---|---|
| | It indicates forbidding. The forbidden subject-matter is indicated in the icon or by images or characters aside. |
| | It indicates compulsory implementation. The compulsory subject-matter is indicated in the icon or by images or characters aside. |

## ■ Warning

| | | |
|---|---|---|
| Warning | Delegate installation | Please entrust the distributor or professionals to install the unit. The installers must have the relevant know-how. Improper installation performed by the user without perm ission may cause fire, electric,shock, personal injury or water leakage. |

| | | |
|---|---|---|
| Usage Warning | Forbid | Do not spray flammable aerosol to the wired remote controller directly. Otherwise, fire may occur. |
| | Forbid | Do not operate with wet hands or let water enter the wiredremote controller. Otherwise, electric shock may occur. |

INTENSITY
Refresh your life

# II.OTHER PRECAUTIONS

**Installation Location**

Do not install the unit in a place with much oil, steam, sulfide gas. Otherwise, the product may deform and fail.

**Preparation before installation**

1. Check whether the following assemblies are complete.

| No. | Name | Qty. | Remarks |
|---|---|---|---|
| 1 | Wired remote Controller | 1 | ——————— |
| 2 | Installation & owner's manual | 1 | ——————— |
| 3 | M4×25 Cross head screwdriver | 2 | For installing the wire controller on the electrical box |
| 4 | Plastic screw bar | 2 | For installing the wire controller on the electrical box |
| 5 | Connecting wires of signal receiving panel | 1 | For connecting the signal receiving panel with the 4-core shielding wire |

INTENSITY®
Refresh your life

2. Prepare the following assemblies on the site.

| No. | Name | Qty. | Remarks |
|---|---|---|---|
| 1 | Electrical box | 1 | General electrical box size, embedded in the wall in advance. |
| 2 | 4-core shielding wire | 1 | PVVR-0.5mm2x4,embedded in the wall in advance. |
| 3 | Wiring tube(insulation casing) | 1 | Embedded in the wall in advance, the longest is 12M. |
| 4 | Cross head screwdriver | 1 | For installing the cross head screw. |
| 5 | Small cross head screwdriver | 1 | For taking down the bottom cover of wire controller. |

**Notice to installation of wired remote controller**

1). This manual contains information about the procedure of installing the controller.

2). The circuit of the wired remote controller is low voltage circuit, Never connect it with a 220V/380V circuit or put it into a same Wiring Tube with the circuit. and the interval must be more than 300~500mm.

3). The shield cable must be connected stable to the ground, or transmission may fail.

4). Do not to attempt to extend the shield cable by cutting, if it is necessary, use Terminal Connection Block to connect.

5). After finishing connection, do not use Megger to have the installation check to the signal wire.

INTENSITY® Refresh your life

# III.INSTALLATION PROCEDURE

Principle diagram of wired remote controller:

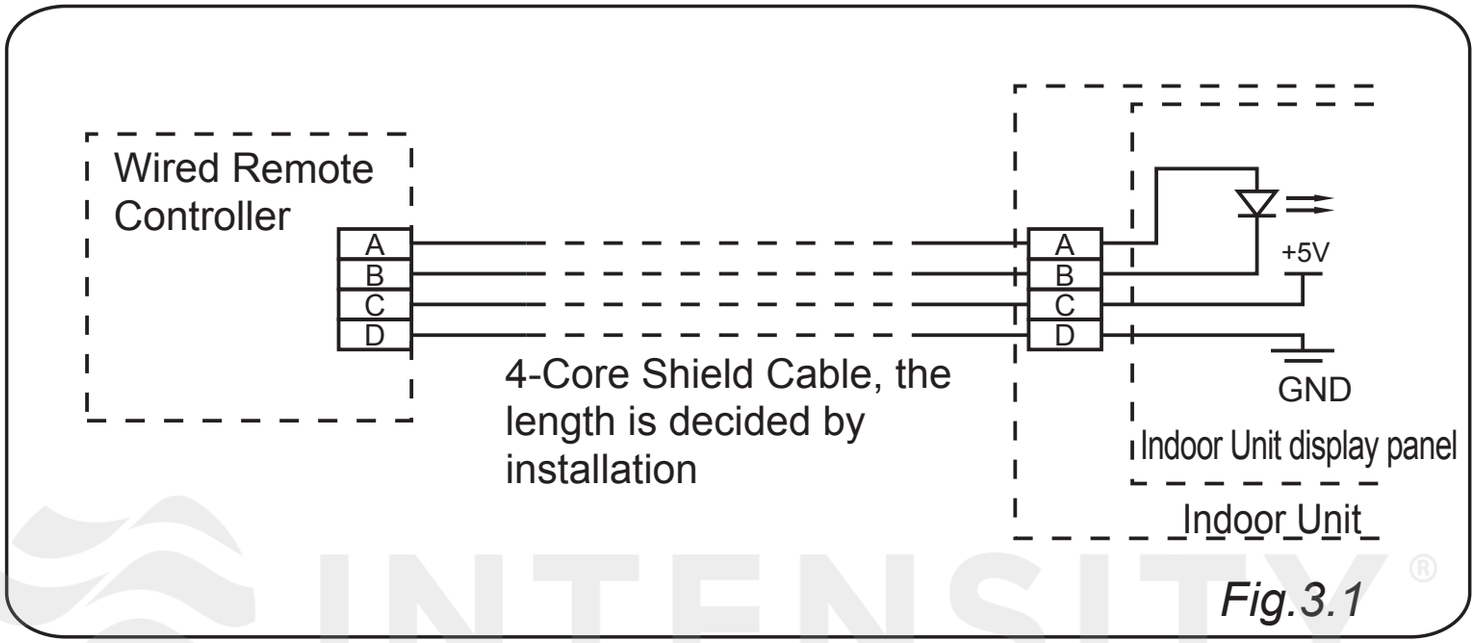


*Fig.3.1*

INTENSITY®
Refresh your life

Installation instruction figure

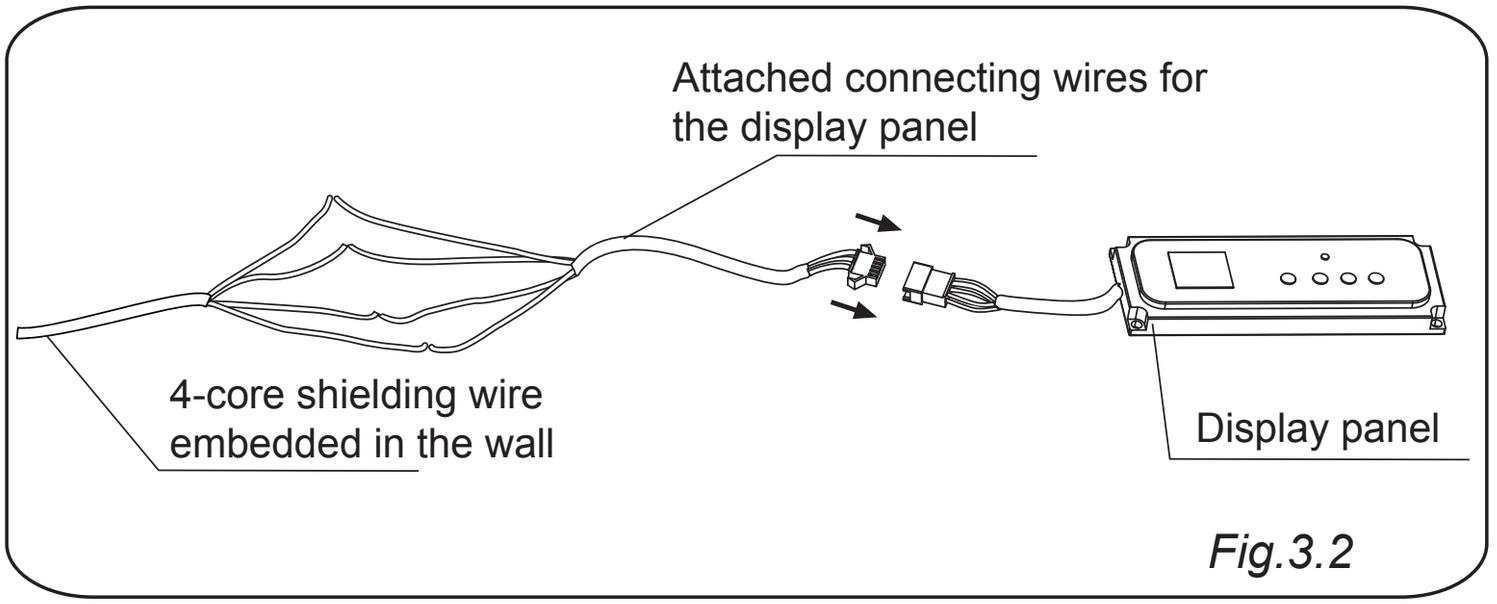


*Fig.3.2*

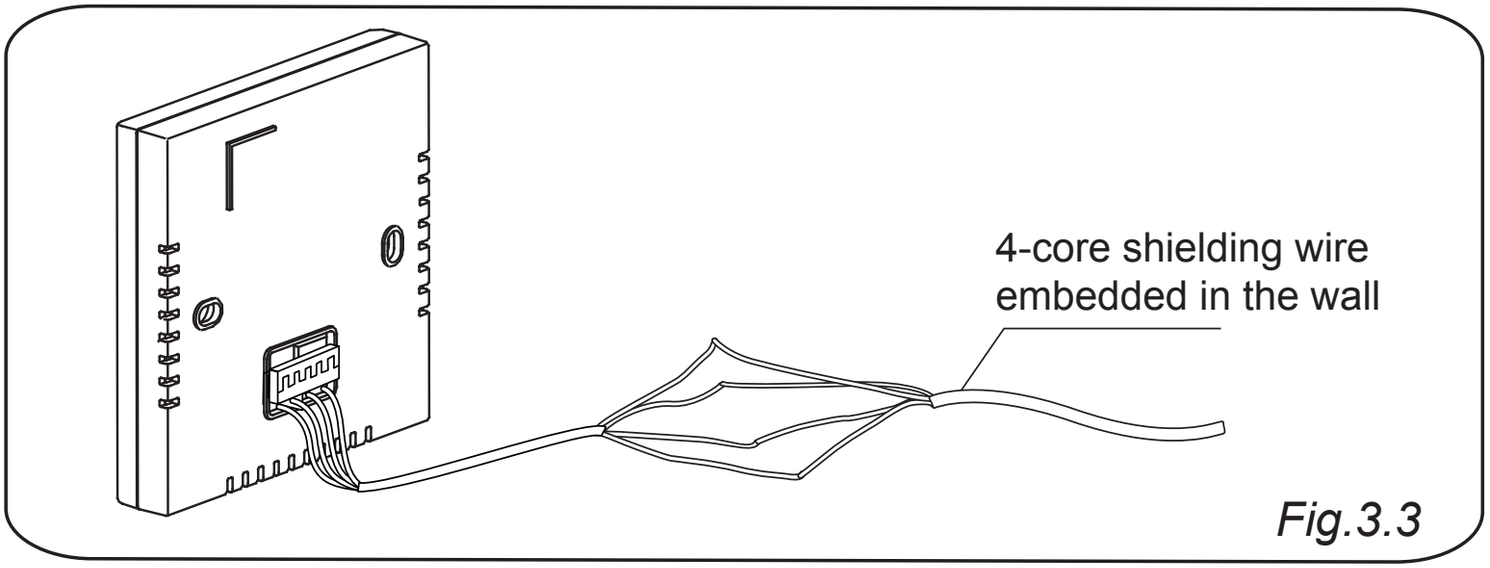


*Fig.3.3*

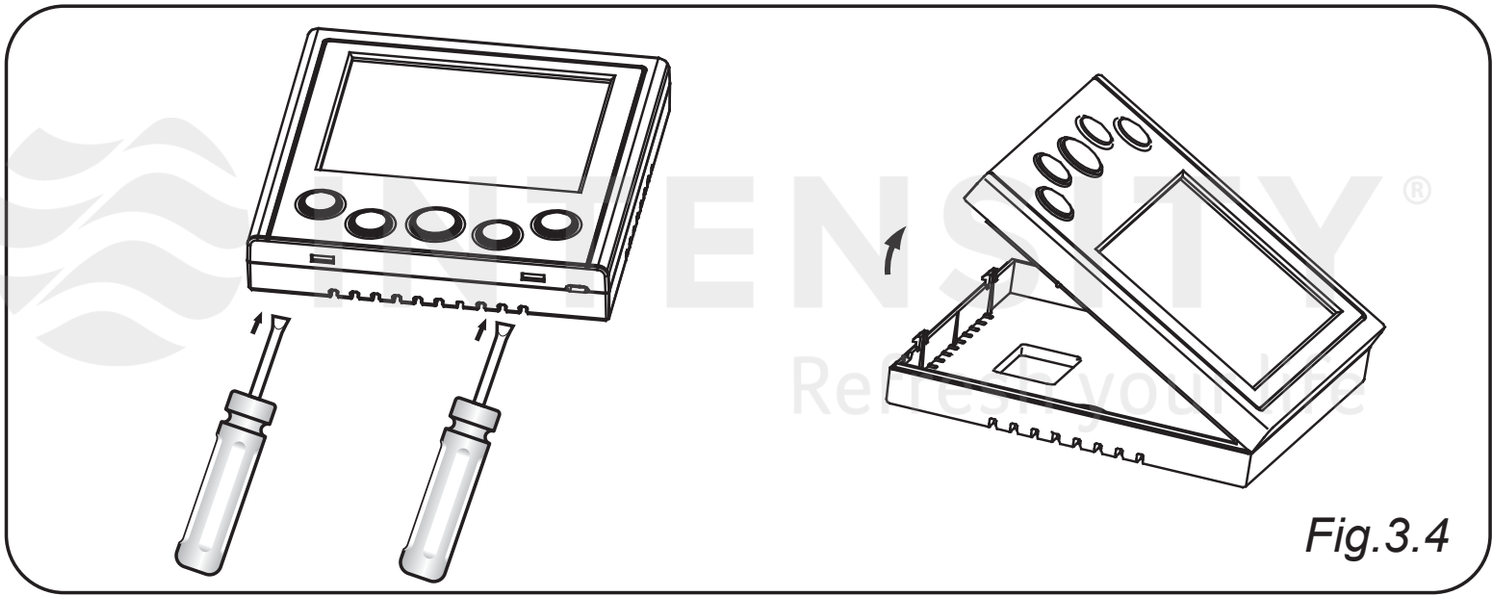

*Fig.3.4*

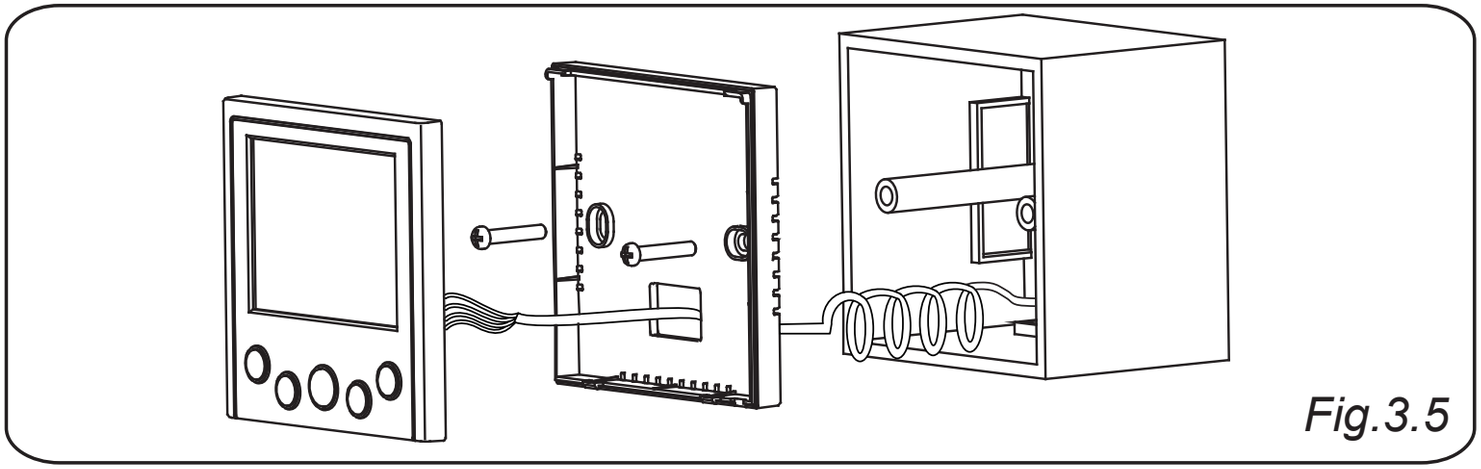

*Fig.3.5*

1.Insert the 4-core plug of the connecting wires for the signal receiving panel into the 4-core socket of the signal receiving panel. (*Fig.3.2*)

2.Connect the other terminal of the connecting wires for the signal receiving panel with the embedded 4-core shielding wire, and ensure the connection are reliable and firm. (*Fig.3.2*)

3.Connect the led-out wire of the wire controller with the embedded 4-core shielding wire, and ensure the connection are reliable and firm. (*Fig.3.3*)

4.Use a straight screwdriver to insert into the catching groove in the bottom of wire controller and take down the bottom cover. (*Fig.3.4*)

5.Adjust the length of two plastic screw bars in the accessory to be standard length from the electrical box screw bar to the wall. Make sure when install the screw bar to the electrical box screw bar, make it as flat as the wall.

6.Use cross head screws to fix the wire controller bottom cover in the electric control box through the screw bar. Make sure the wire controller bottom cover is on the same level after installation, and then install the wire controller back to the bottom cover. *(Fig.3.5* )

**Warning**

Over fasten the screw will lead to deformation of back cover and fracture of liquid screen.
When install the bolts, please make the screw bar height to be the same with the wire controller and will not out of shape.
When under installation, reserve certain length of the connecting wire for convenient to take down the wire controller while during maintenance. (*Fig.3.5)*

INTENSITY
Refresh your life

# IV. Wiring figure of the wired remote controller connect with the indoor unit

1.Wiring figure of the wire controller connect with the four-way cassette type indoor unit

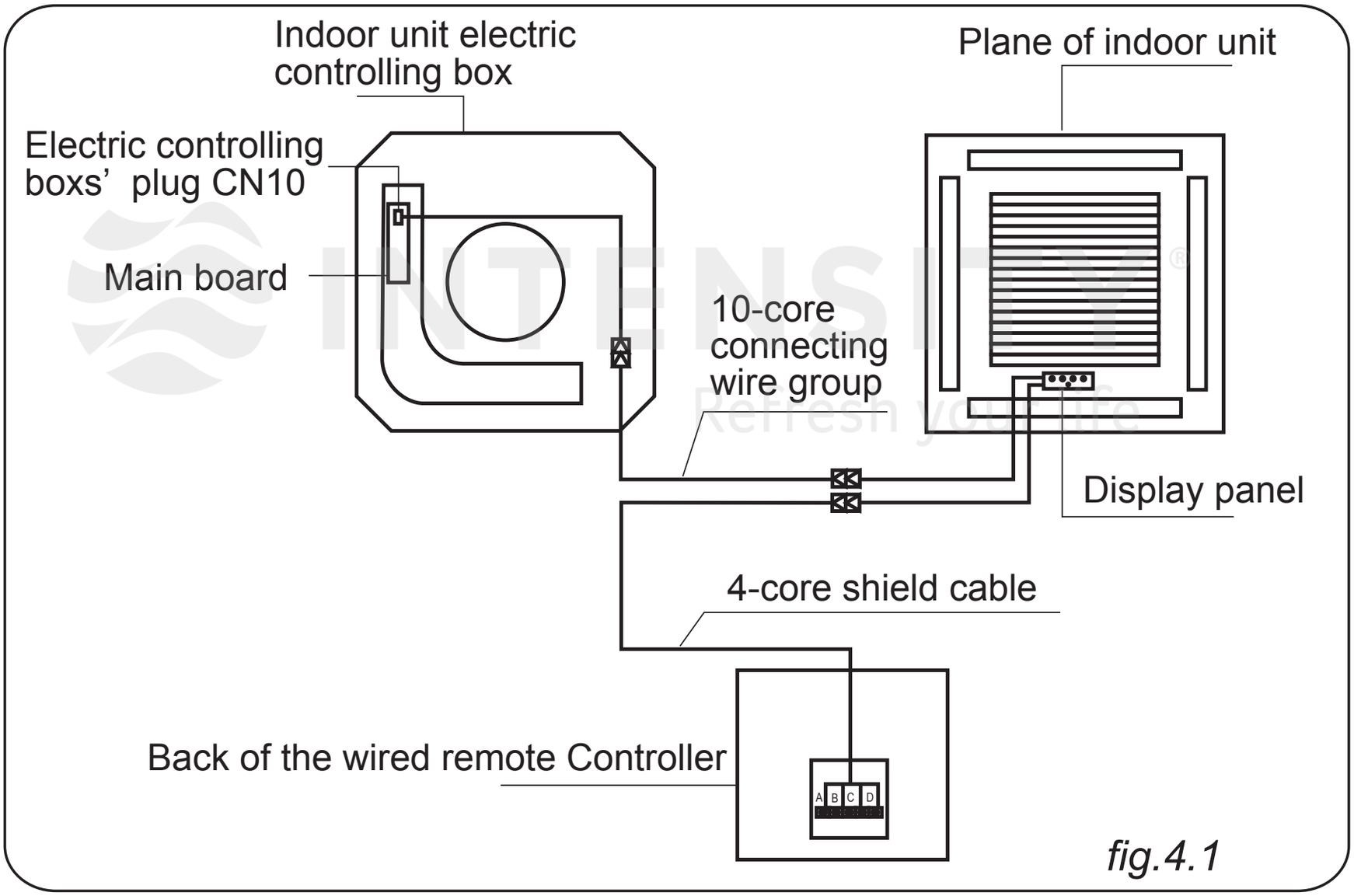


*fig.4.1*

2.Wiring figure of the wire controller connect with the courtyard-style duct type indoor unit

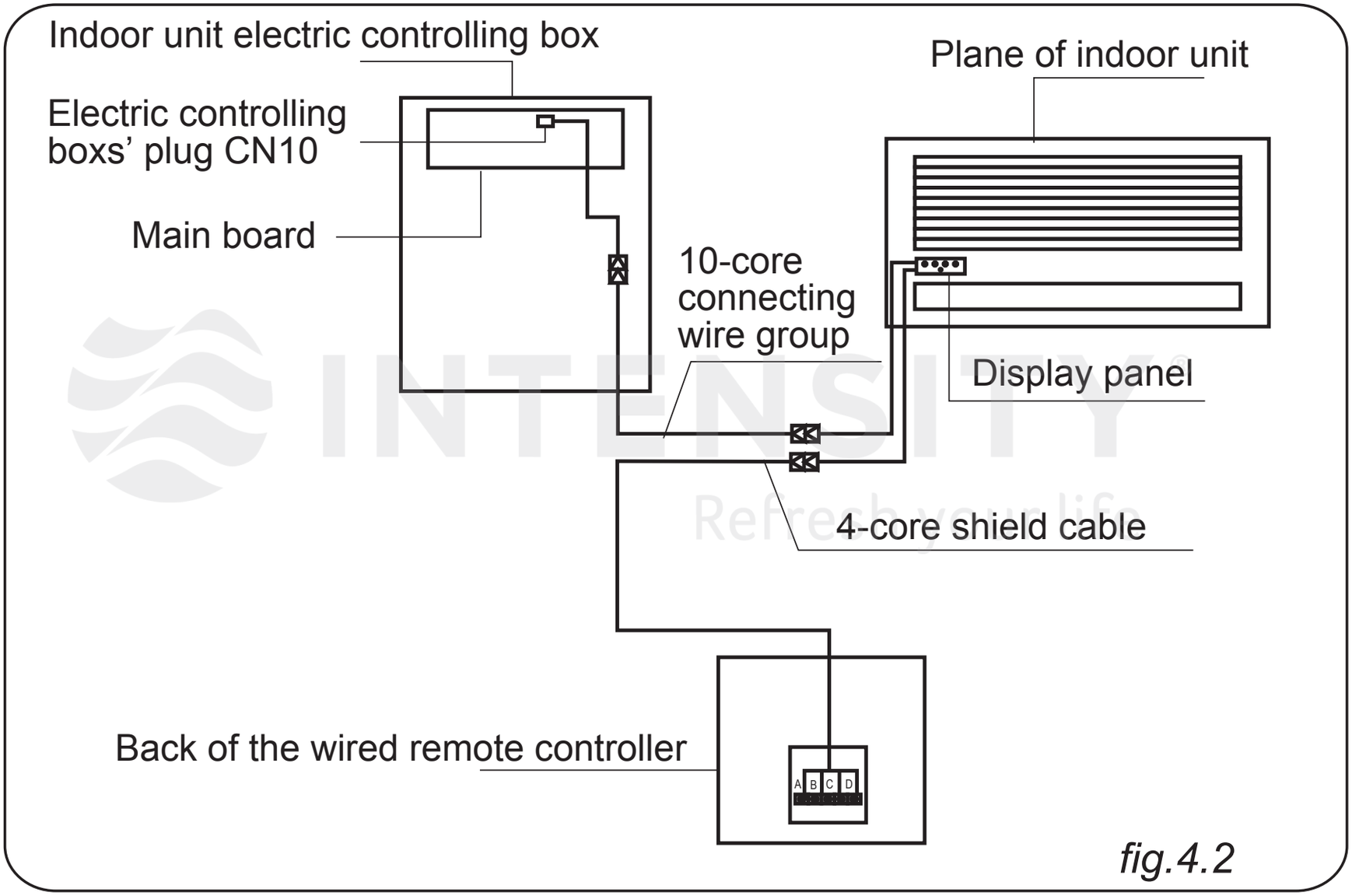


*fig.4.2*

INTENSITY®
Refresh your life

3.Wiring figure of the wire controller connect with the high-static pressure duct type indoor unit

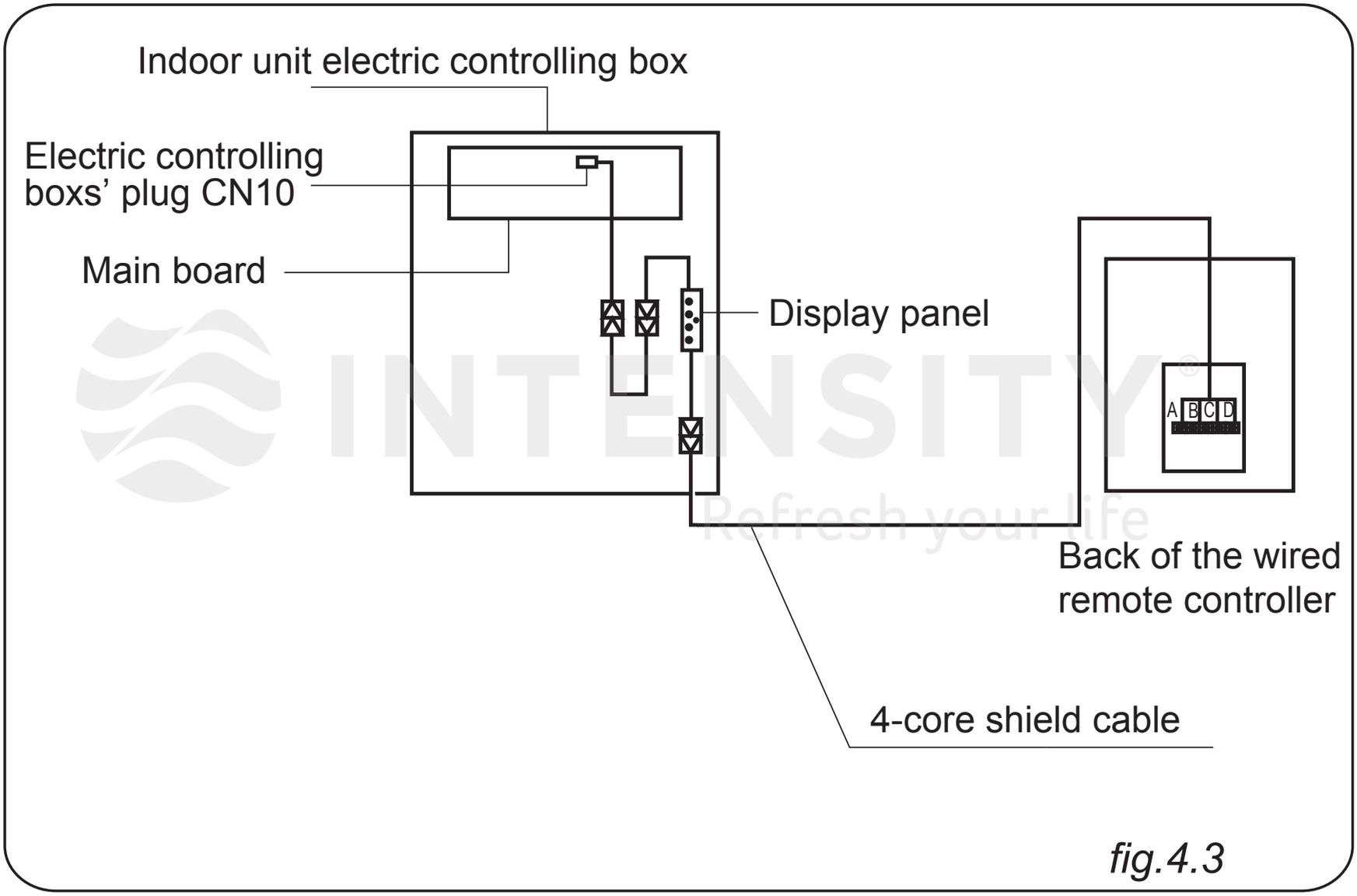


*fig.4.3*

INTENSITY® Refresh your life

4.Wiring figure of the wire controller connect with the wall hanging type indoor unit

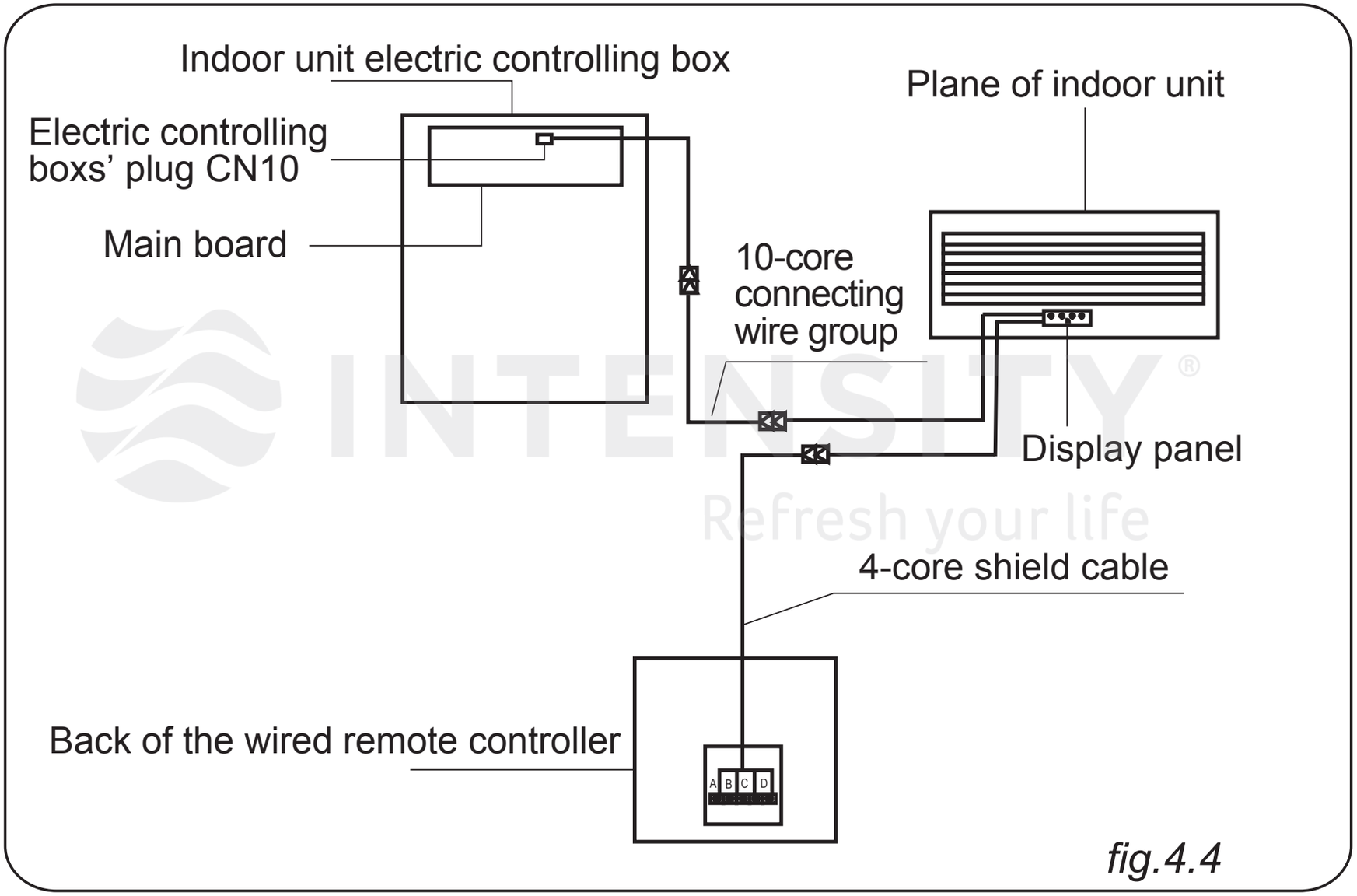


*fig.4.4*

INTENSITY®
Refresh your life

5.Wiring figure of the wire controller connect with the stand-hanging type indoor unit

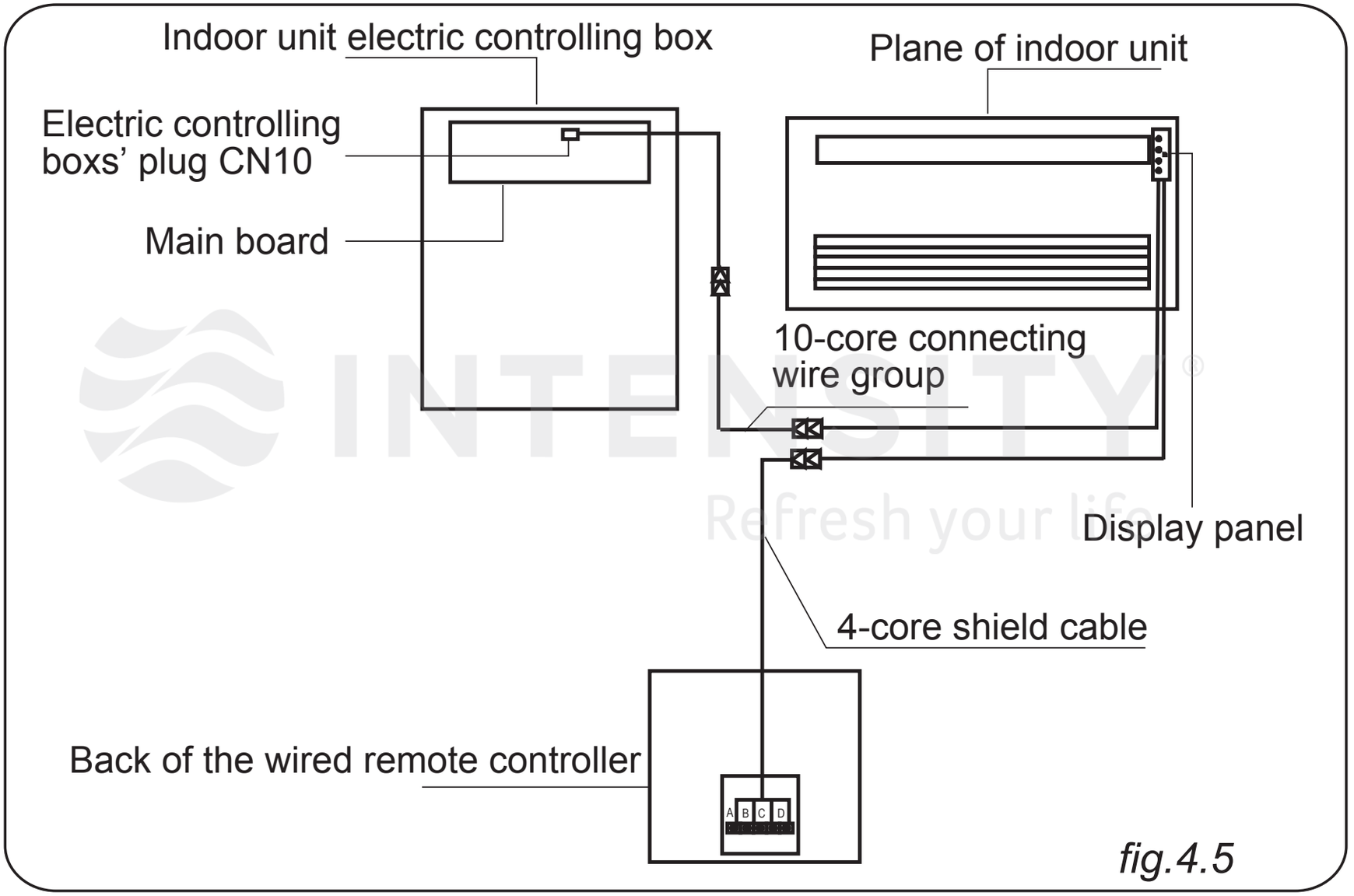


*fig.4.5*

INTENSITY®
Refresh your life

# OPERATION

INTENSITY®
Refresh your life

# I.MAIN PARAMETERS

| MODEL | KJR-86C-E |
|---|---|
| Voltage input | DC +5V |
| Ambient temperature range | -5~43°C |
| Ambient humidity range | RH40%~RH90% |

INTENSITY®
Refresh your life

# II.MAIN FUNCTIONS

1. Set HEAT/ COOL operation mode;
2. Set fan speed;
3. Temperature setting range: 17°C-30°C;
4. Power down memory function;
5. Room temperature display.

# III. NAMES AND FUNCTIONS OF KEYS

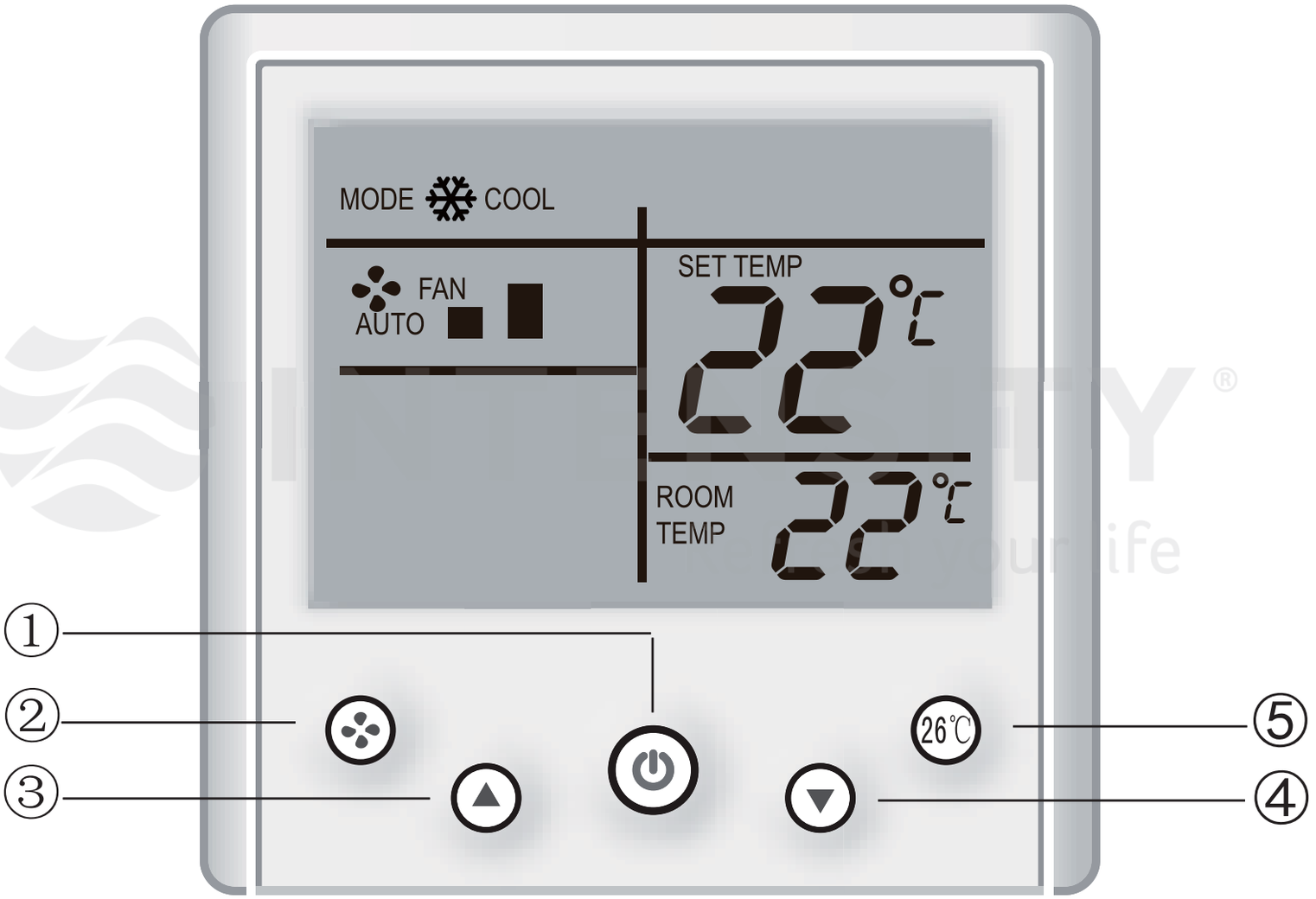

| NO. | KEY | FUNCTION |
|---|---|---|
| ① | ON/OFF | On/Off the unit |
| ② | FAN SPEED | Select fan speed |
| ③ | SET TEMP UP | Increase setting temperature |
| ④ | SET TEMP DOWM | Decrease setting temperature |
| ⑤ | 26°C SHORTCUT | Quickly set the operation tempareture to 26°C |

# IV.OPERATION METHOD

LCD screen of the wired remote controller off.

INTENSITY®
Refresh your life

## ■ ON/OFF

1.When the unit is turned off, press the ON/OFF button, the unit will be turned on and the LCD screen of the wired remote controller on.

2.When the unit is turned on, press the ON/OFF button, the unit will be turned off and the

## ■ Selecting mode:

1.When the unit is turned on, press the temperature adjusting buttons “▲” and “▼” at the same time for 3 seconds to select the operation mode, each press will switch the operation mode as the following order: COOL→ HEAT→COOL

## ■ Select the fan speed:

1.When the unit is turned on, press the FAN SPEED key to set the fan speed of indoor unit. The fan speed switching order is: AUTO→LOW →MID →HIGH→ AUTO

2.Setting the fan speed to AUTO then the indoor unit will actually run at LOW speed.

## ■ Setting temperature:

When the unit is turned on, press the temperature adjusting buttons “▲”/ “▼” to increase/ decrease the setting temperature, the setting range is 17°C-30°C.

## ■ 26°C quick setting:

1.When the unit is turned on, you can press the 26°C shortcut key to quickly set the operation tempareture to 26°C.

INTENSITY®
Refresh your life